Husqvarna

SERVICE

7

I0400182

IPL, 575 XP EPA, 570 EPA, 2004-09, 106 40 13-61

575 XP EPA
570 EPA

Spare parts
Ersatzteile
Pièces détachées
Reserve onderdelen
Repuestos
Reservdelar

PART NUMBER	SQUARE NOTE
501 27 08-01	M
501 48 54-02	D
501 51 72-01	A
501 54 41-02	B
501 59 80-02	B
501 61 58-01	B
501 67 32-01	D
501 67 35-01	D
501 69 17-01	S
501 76 83-05	K
501 81 99-01	D
501 87 53-04	L
501 89 53-01	B
501 91 14-01	S
502 20 65-01	F
502 20 83-02	F
503 20 02-16	F,L,M
503 20 02-20	D
503 20 08-70	M
503 20 25-16	Q
503 20 25-20	F
503 20 34-19	C
503 20 39-01	F
503 20 47-01	J
503 20 52-16	C
503 20 53-01	B
503 20 73-20	G,M
503 20 74-30	M
503 21 26-16	F,M
503 21 28-10	A,K,L,M,Q
503 21 29-10	C
503 21 39-02	M
503 21 39-02	M
503 21 70-16	R
503 21 70-72	L
503 21 88-74	J
503 22 00-01	A
503 22 04-01	D
503 22 24-01	M
503 22 65-03	F
503 22 66-01	J
503 23 00-04	B
503 23 00-42	D
503 23 00-63	A
503 23 00-66	A
503 23 51-08	H
503 23 51-11	H
503 25 20-02	N
503 25 56-01	H
503 25 56-01	N
503 26 09-01	N
503 27 21-01	B
503 28 33-01	F,P
503 28 90-46	H
503 28 90-47	H
503 43 20-01	B
503 43 65-01	L
503 44 32-01	K
503 47 90-01	P
503 47 96-01	P
503 47 97-01	P
503 48 00-01	P
503 48 05-01	P
503 48 11-01	P
503 48 18-01	P
503 52 13-03	B
503 52 15-01	B
503 53 56-01	P
503 53 57-01	P
503 55 22-01	H

PART NUMBER	SQUARE NOTE
503 55 85-01	S
503 55 86-01	S
503 55 86-02	S
503 57 76-02	K
503 57 89-01	K
503 57 89-01	M
503 62 12-01	S
503 62 49-01	B
503 63 75-02	J
503 63 75-03	J
503 64 79-02	M
503 66 59-01	P
503 70 99-01	L
503 71 97-01	A
503 73 58-01	K
503 74 44-05	B
503 75 22-02	L
503 75 24-01	B
503 76 29-02	A
503 76 64-02	G
503 79 27-01	L
503 81 13-01	B
503 81 30-01	B
503 84 61-01	M
503 86 17-71	B
503 86 93-01	L
503 86 97-01	L
503 89 47-01	M
503 89 70-01	A
503 90 34-01	P
503 92 27-01	A
503 97 40-01	P
503 98 74-01	E
503 99 83-01	A
505 27 57-19	M
505 30 36-61	B
505 30 51-25	C
537 01 25-01	P
537 01 26-01	P
537 01 37-02	M
537 01 68-01	A
537 01 71-01	M
537 01 72-01	M
537 01 74-01	A
537 02 01-01	P
537 02 44-01	M
537 03 35-01	A
537 03 38-03	A
537 03 62-02	B
537 03 73-01	J
537 04 03-01	M
537 04 34-01	A
537 04 41-02	A
537 05 13-01	M
537 07 94-01	A
537 07 95-01	A
537 08 92-01	M
537 13 14-02	Q
537 17 41-01	A
537 17 70-01	P
537 20 23-01	C
537 20 26-01	C
537 20 27-01	L
537 20 24-01	C
537 20 28-01	L
537 20 29-02	C
537 20 30-01	M
537 20 31-01	L
537 20 32-01	L
537 20 33-01	N

PART NUMBER	SQUARE NOTE
537 20 35-01	L
537 20 36-01	L
537 20 37-01	F
537 20 38-01	L
537 20 39-01	M
537 20 43-01	F
537 20 45-01	F
537 20 47-01	F
537 20 49-01	F
537 20 50-01	F
537 20 51-01	L
537 20 52-01	L
537 20 53-01	L
537 20 55-01	K
537 20 56-01	K
537 20 57-01	K
537 20 58-01	N
537 20 59-01	J
537 20 59-02	Q
537 20 66-01	F
537 20 66-02	F
537 20 66-03	F
537 20 71-01	E,H
537 20 75-01	F
537 20 78-01	B
537 20 80-01	H
537 20 82-01	G
537 20 83-01	K
537 20 84-01	K
537 20 85-01	K
537 20 86-01	D
537 20 87-01	L
537 20 89-01	J
537 20 89-02	Q
537 20 90-01	L
537 20 91-01	B
537 20 92-01	M
537 20 93-72	M
537 20 96-01	D
537 20 96-02	Q
537 20 98-01	K
537 21 03-01	K
537 21 03-02	K
537 21 03-03	K
537 21 03-04	K
537 21 04-01	F
537 21 05-01	E,R
537 21 06-01	G
537 21 07-01	L
537 21 08-01	Q
537 21 09-01	Q
537 21 10-01	Q
537 21 11-01	K
537 21 21-02	C
537 21 21-03	C
537 21 24-01	R
537 21 25-01	E
537 21 25-02	E
537 21 28-01	Q
537 21 29-01	Q
537 21 31-01	Q
537 21 34-01	Q
537 21 35-04	K
537 21 37-01	F,P
537 21 50-01	K
537 21 50-01	M
537 21 52-02	K,M
537 23 25-01	C
537 25 41-02	H
537 25 45-02	H

PART NUMBER	SQUARE NOTE
537 25 47-02	H
537 26 68-01	P
537 27 42-01	P
537 27 74-01	D
537 28 32-01	C
537 28 34-01	C
537 29 44-01	H
537 30 61-01	N
537 32 85-02	H
537 33 10-01	A
537 35 95-01	K
537 36 06-01	B
537 37 79-01	M
537 38 28-01	P
537 38 29-01	P
537 38 30-01	P
537 38 31-01	P
537 38 32-01	P
537 38 33-01	P
537 38 34-01	P
537 38 35-01	P
537 38 36-01	P
537 38 37-01	P
537 38 38-01	P
537 38 39-01	P
537 38 40-01	P
537 38 41-01	P
537 38 42-01	P
537 38 43-01	P
537 38 44-01	P
537 38 45-01	P
537 38 46-01	P
537 38 47-01	P
537 38 49-01	P
537 38 50-01	P
537 38 51-01	P
537 38 52-01	P
537 38 53-01	P
537 38 54-01	P
537 38 55-01	P
537 38 56-01	P
537 40 33-01	P
720 12 40-20	K
724 12 87-59	G
725 53 33-55	H
725 53 70-55	G
731 23 14-01	F
737 43 12-00	H
738 22 02-25	N
740 48 07-02	A

1 = 537 21 26-01 Set of gaskets, Dichtungssats, Jeu de joints, Juego de juntas, Packningssats

N = New part, Neues teil, Nouvelle piece, Nueva pieza Ny detalj

EPA = Environmental Protection Agency (for USA only)

A

***compl** 537 33 10-01 **WA**

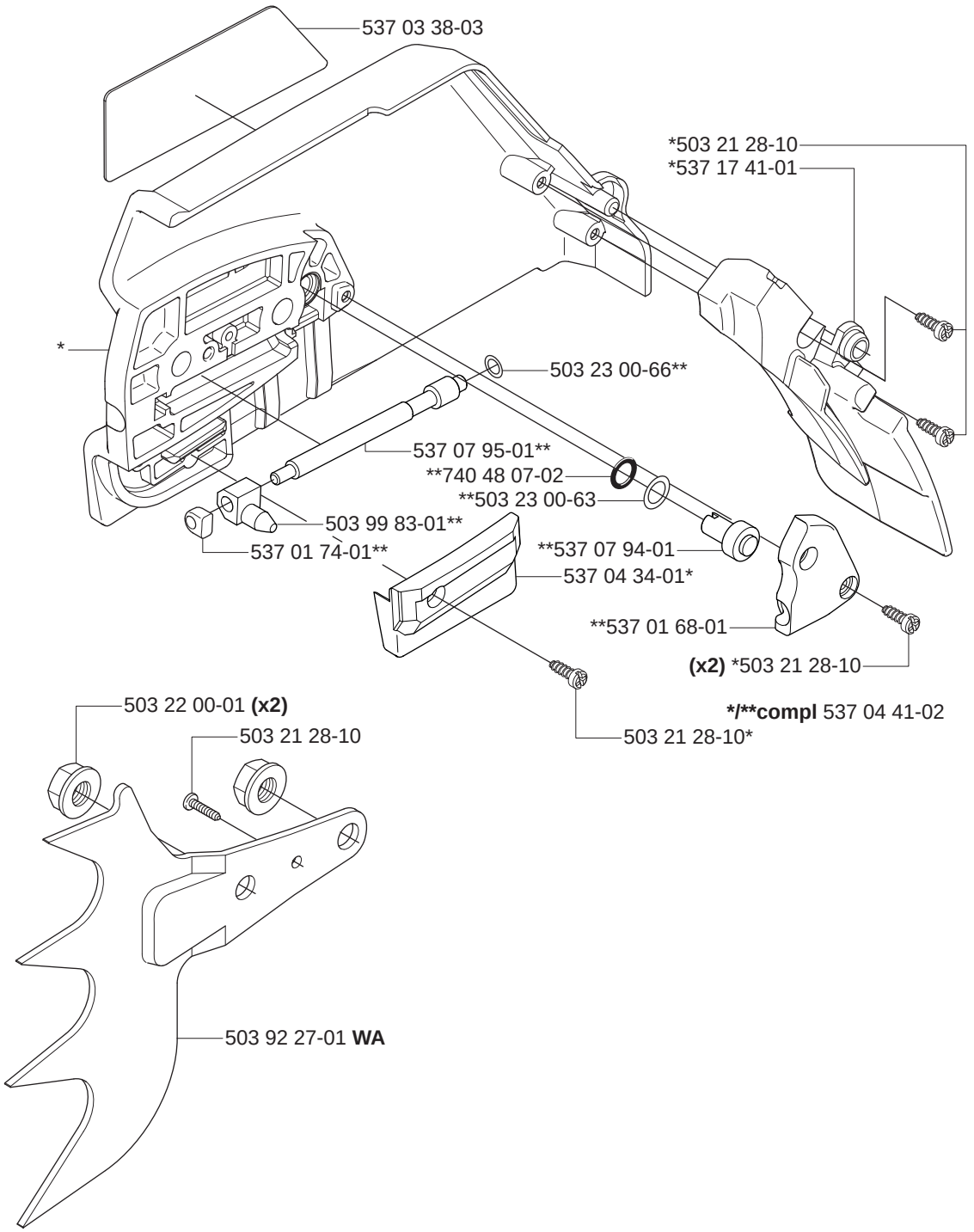

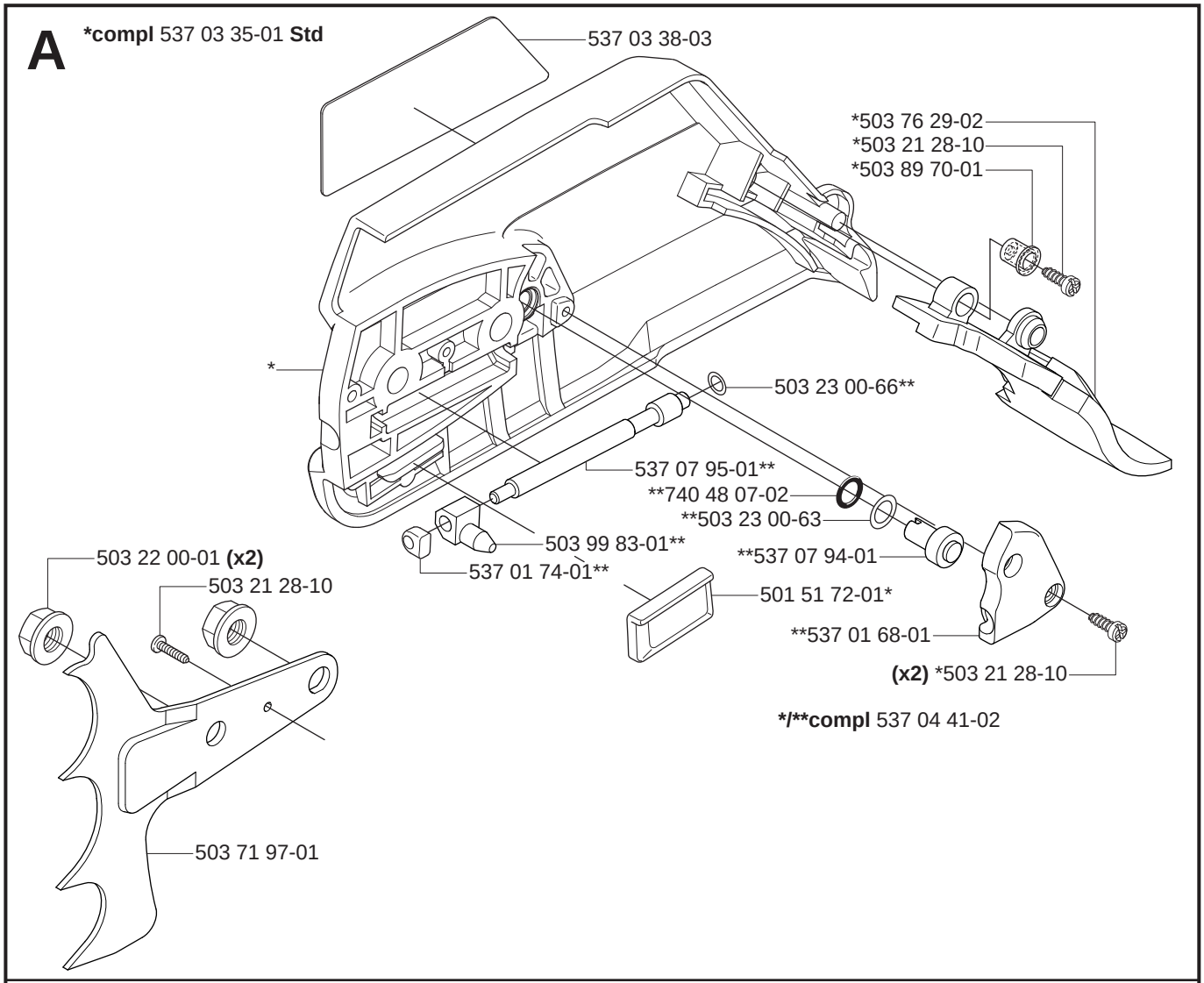
A
*compl 537 03 35-01 Std
537 03 38-03
*503 76 29-02
*503 21 28-10
*503 89 70-01
*
503 23 00-66**
537 07 95-01**
**740 48 07-02
**503 23 00-63
503 99 83-01**
537 01 74-01**
**537 07 94-01
501 51 72-01*
**537 01 68-01
(x2) *503 21 28-10
*/**compl 537 04 41-02
503 22 00-01 (x2)
503 21 28-10
503 71 97-01

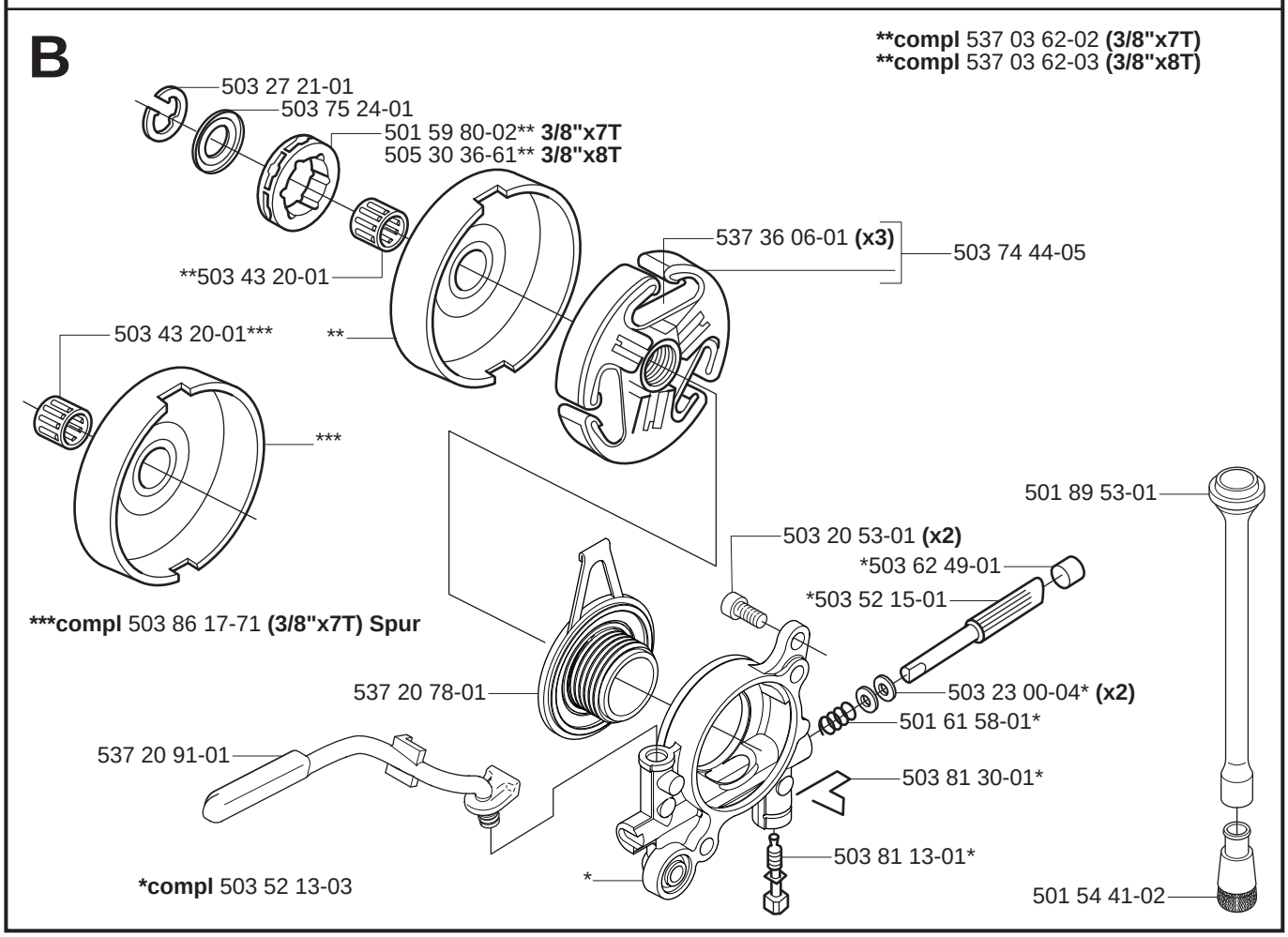
B
**compl 537 03 62-02 (3/8"x7T)
**compl 537 03 62-03 (3/8"x8T)
503 27 21-01
503 75 24-01
501 59 80-02** 3/8"x7T
505 30 36-61** 3/8"x8T
537 36 06-01 (x3)
503 74 44-05
**503 43 20-01
503 43 20-01***
**
***
***compl 503 86 17-71 (3/8"x7T) Spur
501 89 53-01
503 20 53-01 (x2)
*503 62 49-01
*503 52 15-01
537 20 78-01
503 23 00-04* (x2)
501 61 58-01*
537 20 91-01
503 81 30-01*
503 81 13-01*
*compl 503 52 13-03
*
501 54 41-02

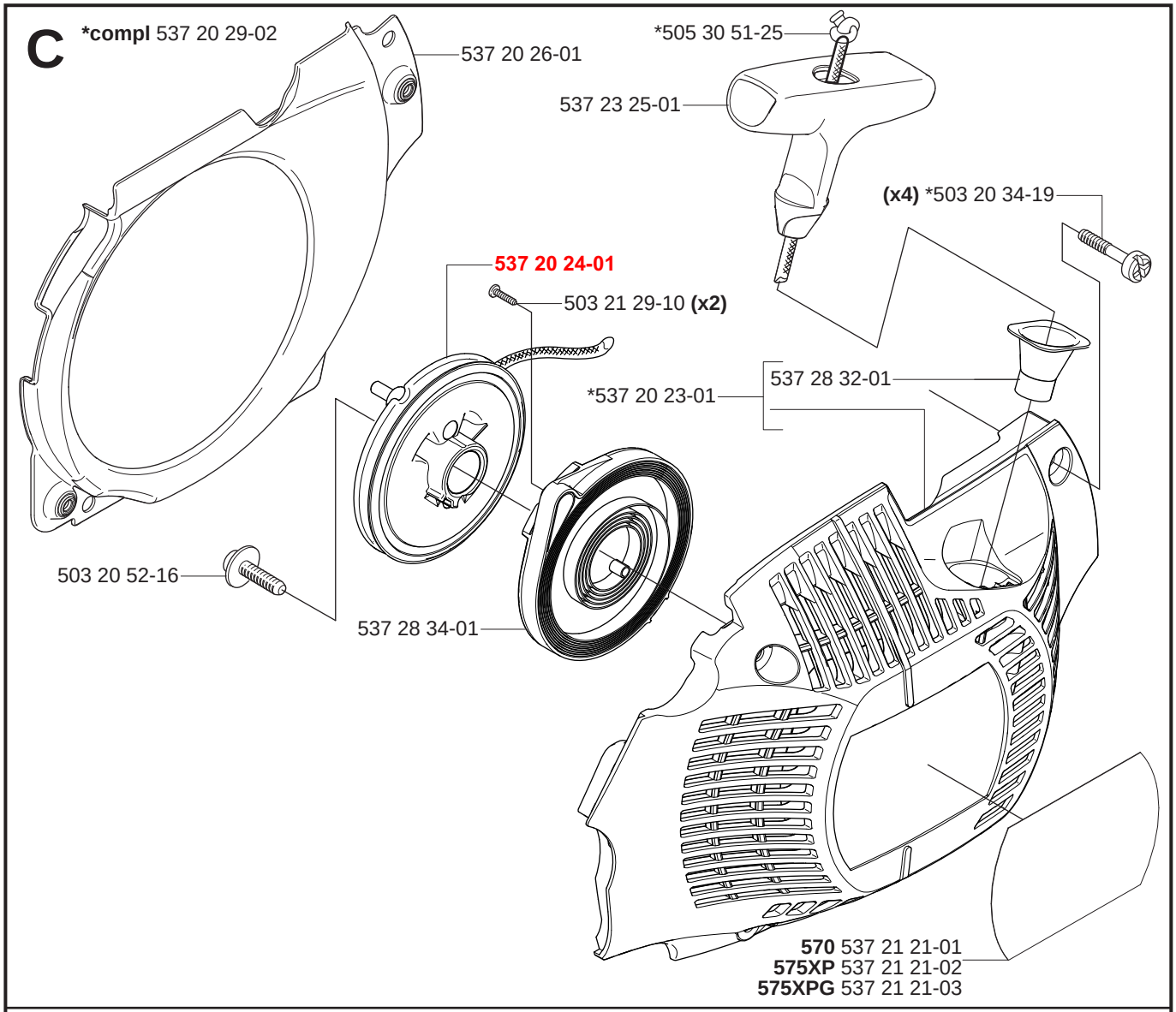
C
*compl 537 20 29-02
537 20 26-01
*505 30 51-25
537 23 25-01
(x4) *503 20 34-19
537 20 24-01
503 21 29-10 (x2)
537 28 32-01
*537 20 23-01
503 20 52-16
537 28 34-01
570 537 21 21-01
575XP 537 21 21-02
575XPG 537 21 21-03

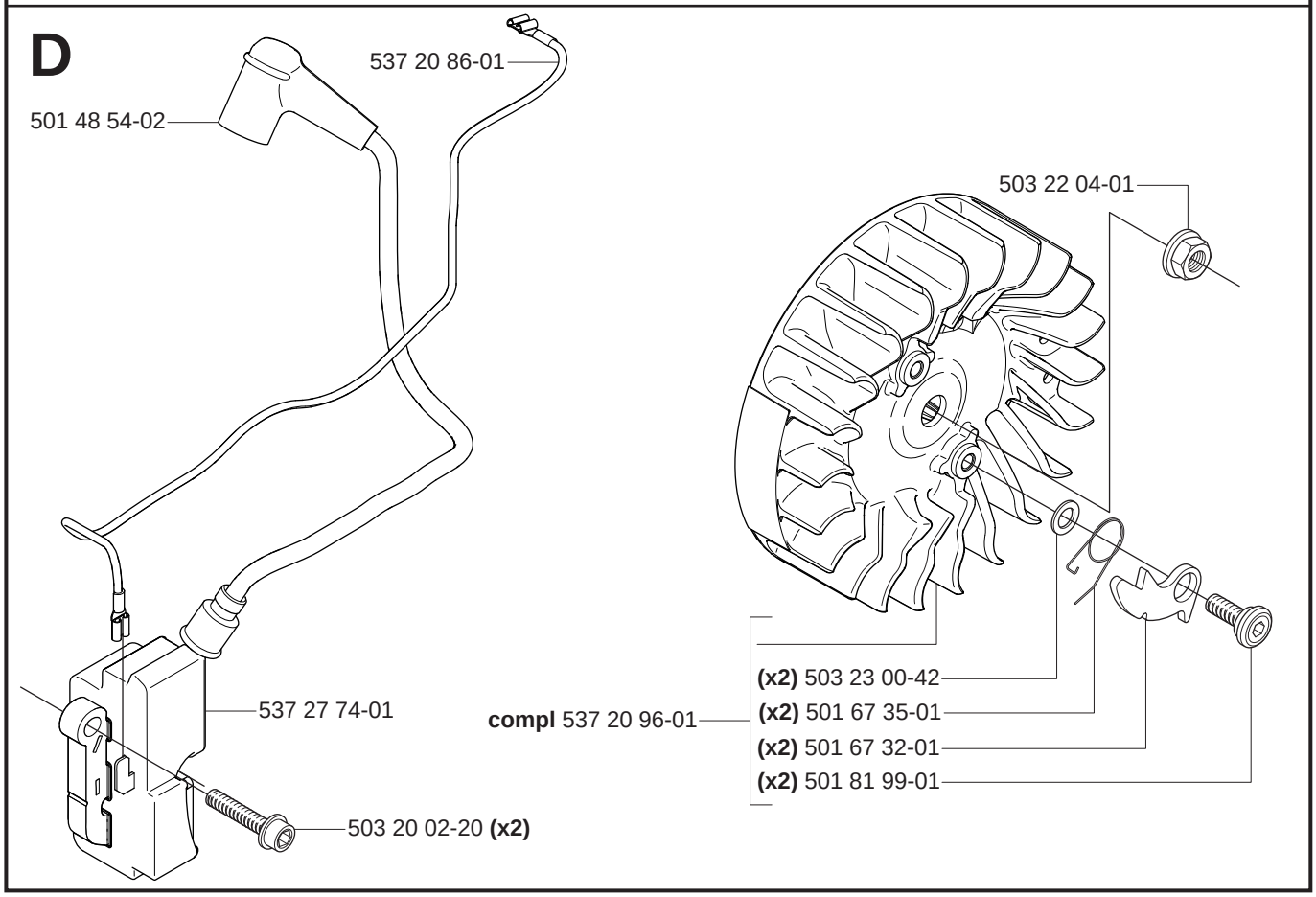
D
537 20 86-01
501 48 54-02
503 22 04-01
537 27 74-01
compl 537 20 96-01
(x2) 503 23 00-42
(x2) 501 67 35-01
(x2) 501 67 32-01
(x2) 501 81 99-01
503 20 02-20 (x2)

E ***compl** 537 21 25-01

503 98 74-01*

537 20 71-01

*

537 21 05-01

E ***compl** 537 21 25-02

503 98 74-01*

537 20 71-01

*

537 21 05-01

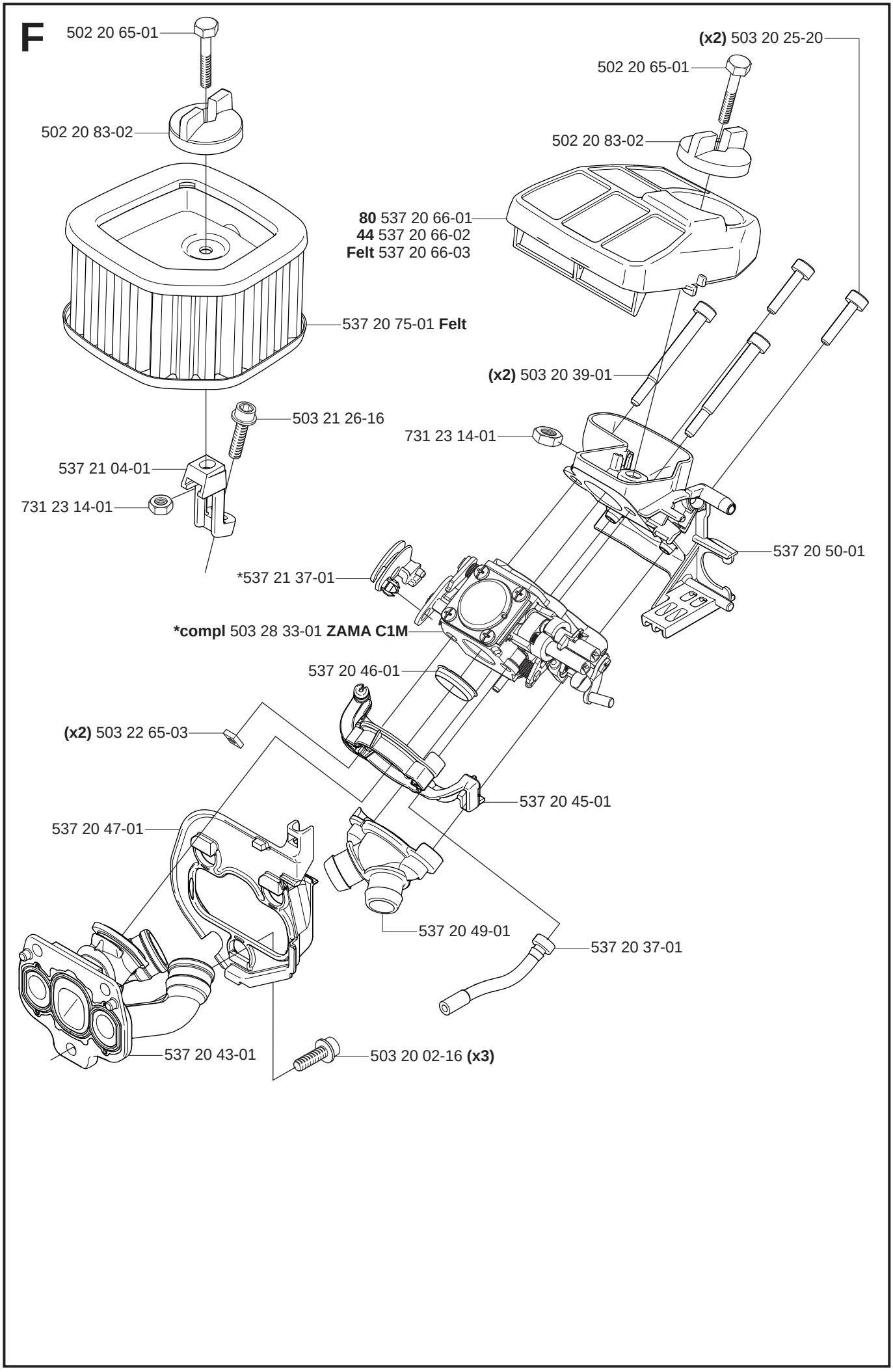
F
502 20 65-01
502 20 83-02
537 20 75-01 **Felt**
503 21 26-16
537 21 04-01
731 23 14-01
(x2) 503 20 25-20
502 20 65-01
502 20 83-02
80 537 20 66-01
44 537 20 66-02
Felt 537 20 66-03
(x2) 503 20 39-01
731 23 14-01
537 20 50-01
*537 21 37-01
***compl** 503 28 33-01 **ZAMA C1M**
537 20 46-01
(x2) 503 22 65-03
537 20 45-01
537 20 47-01
537 20 49-01
537 20 37-01
537 20 43-01
503 20 02-16 **(x3)**

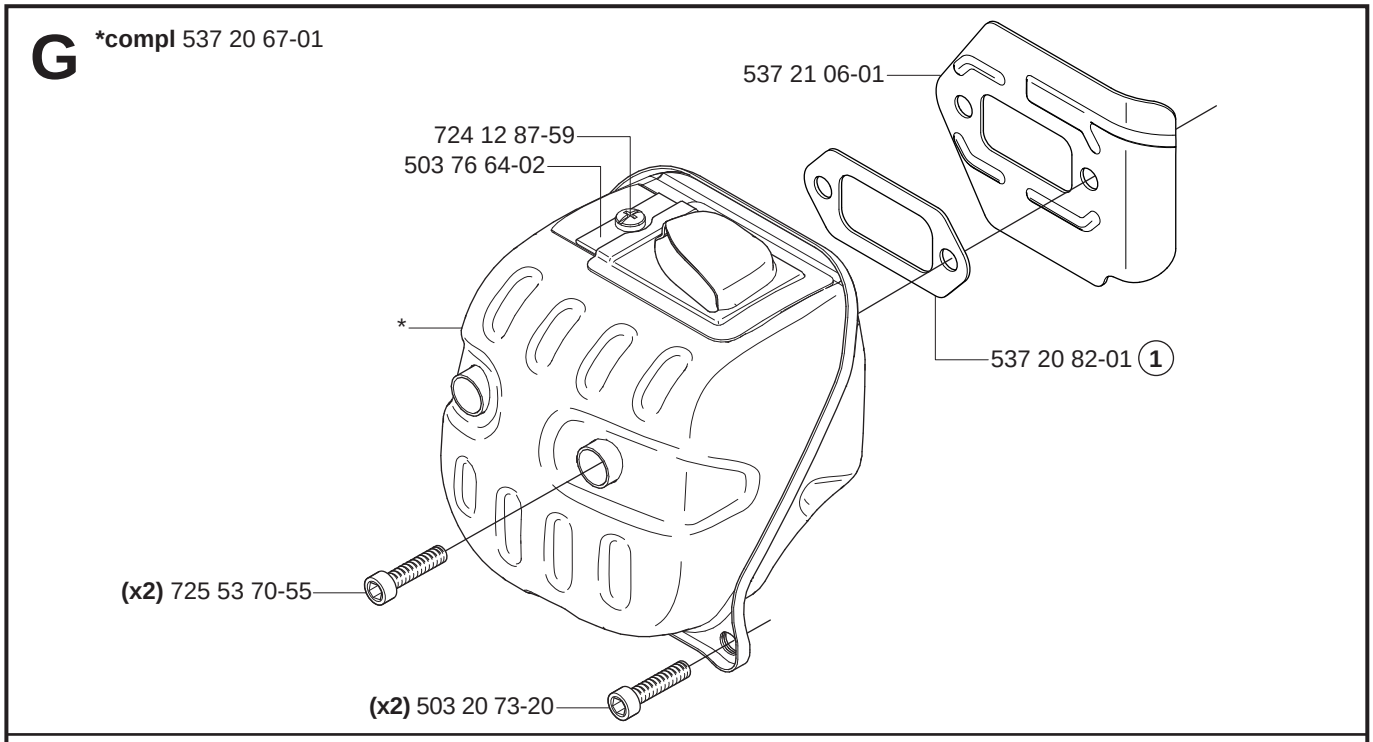
G
*compl 537 20 67-01
537 21 06-01
724 12 87-59
503 76 64-02
*
537 20 82-01 1
(x2) 725 53 70-55
(x2) 503 20 73-20

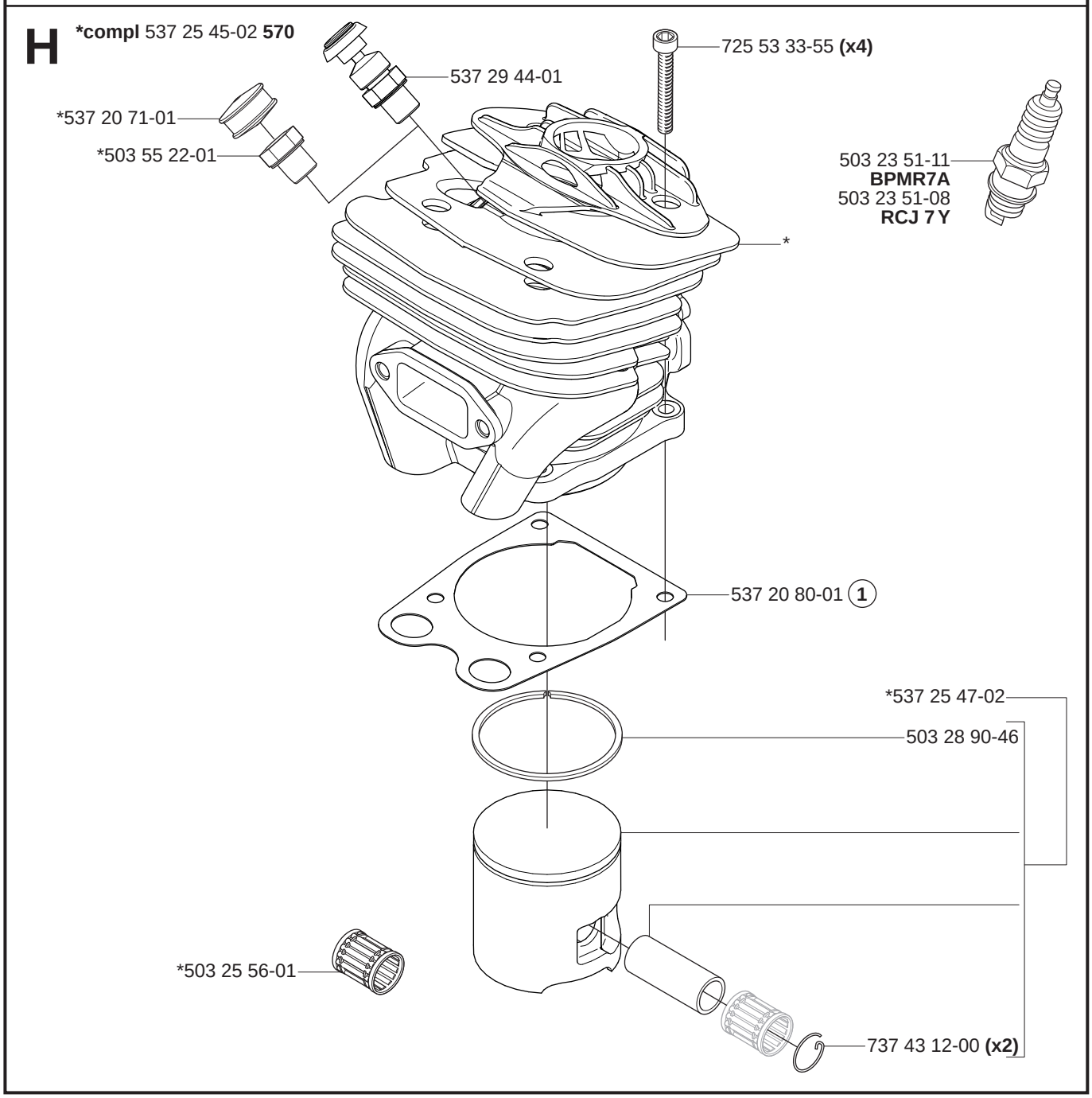
H
*compl 537 25 45-02 570
725 53 33-55 (x4)
537 29 44-01
*537 20 71-01
*503 55 22-01
503 23 51-11
BPMR7A
503 23 51-08
RCJ 7 Y
*
537 20 80-01 1
*537 25 47-02
503 28 90-46
*503 25 56-01
737 43 12-00 (x2)

H ***compl** 537 25 41-02 **575XP**

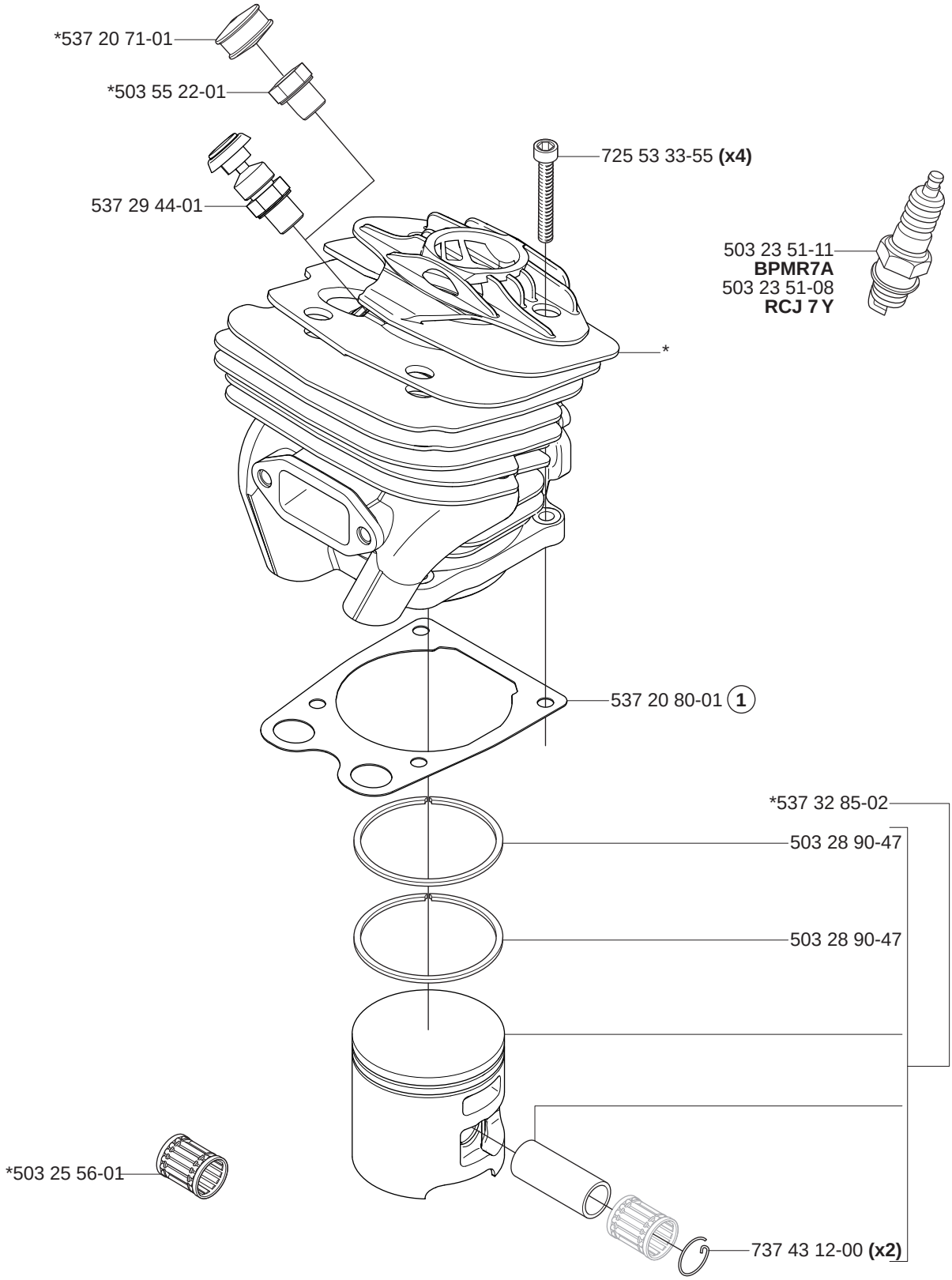

J ***compl** 537 20 59-01
***compl** 537 20 89-01 **WA**

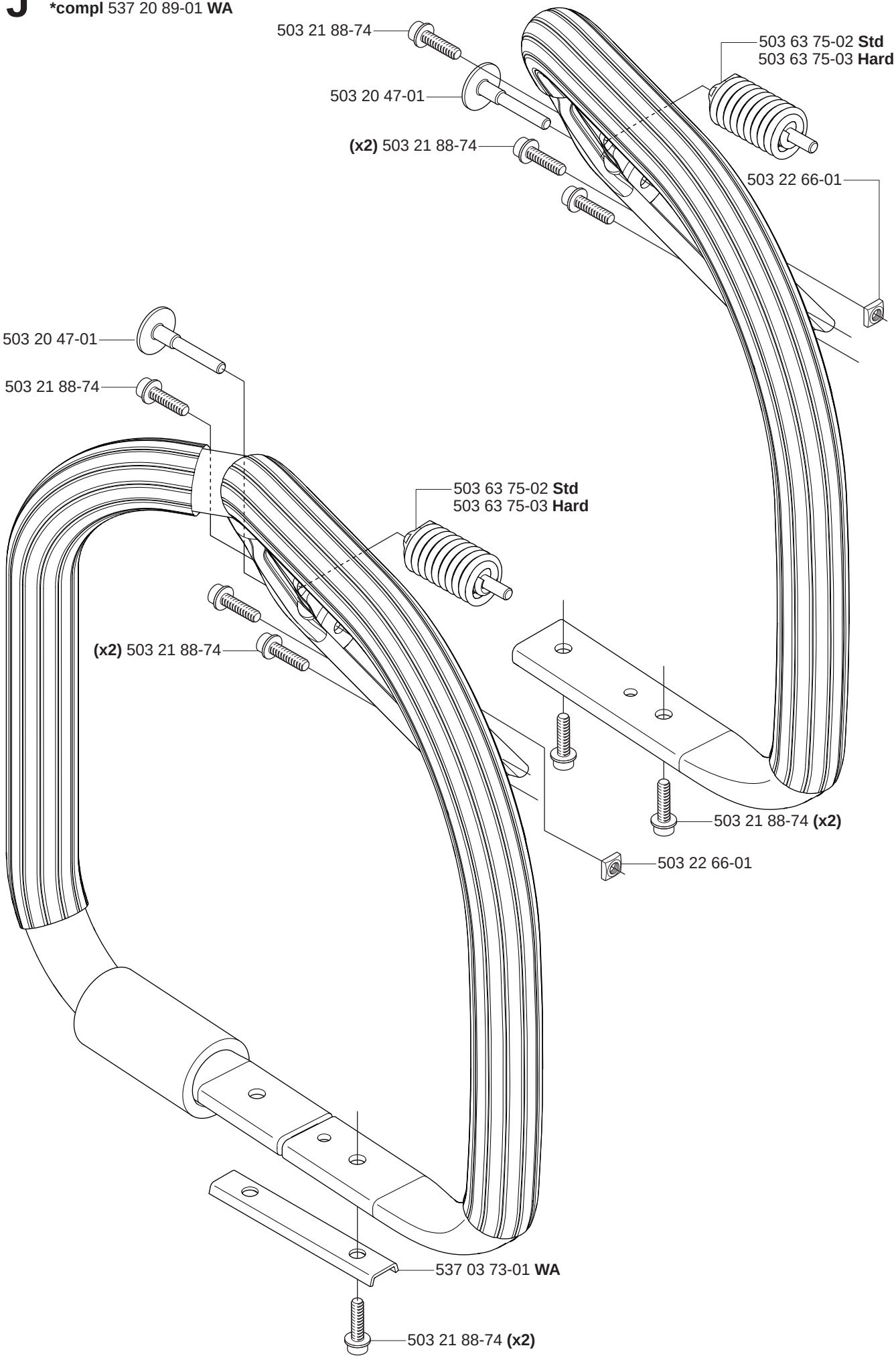

K

***compl** 537 21 35-04

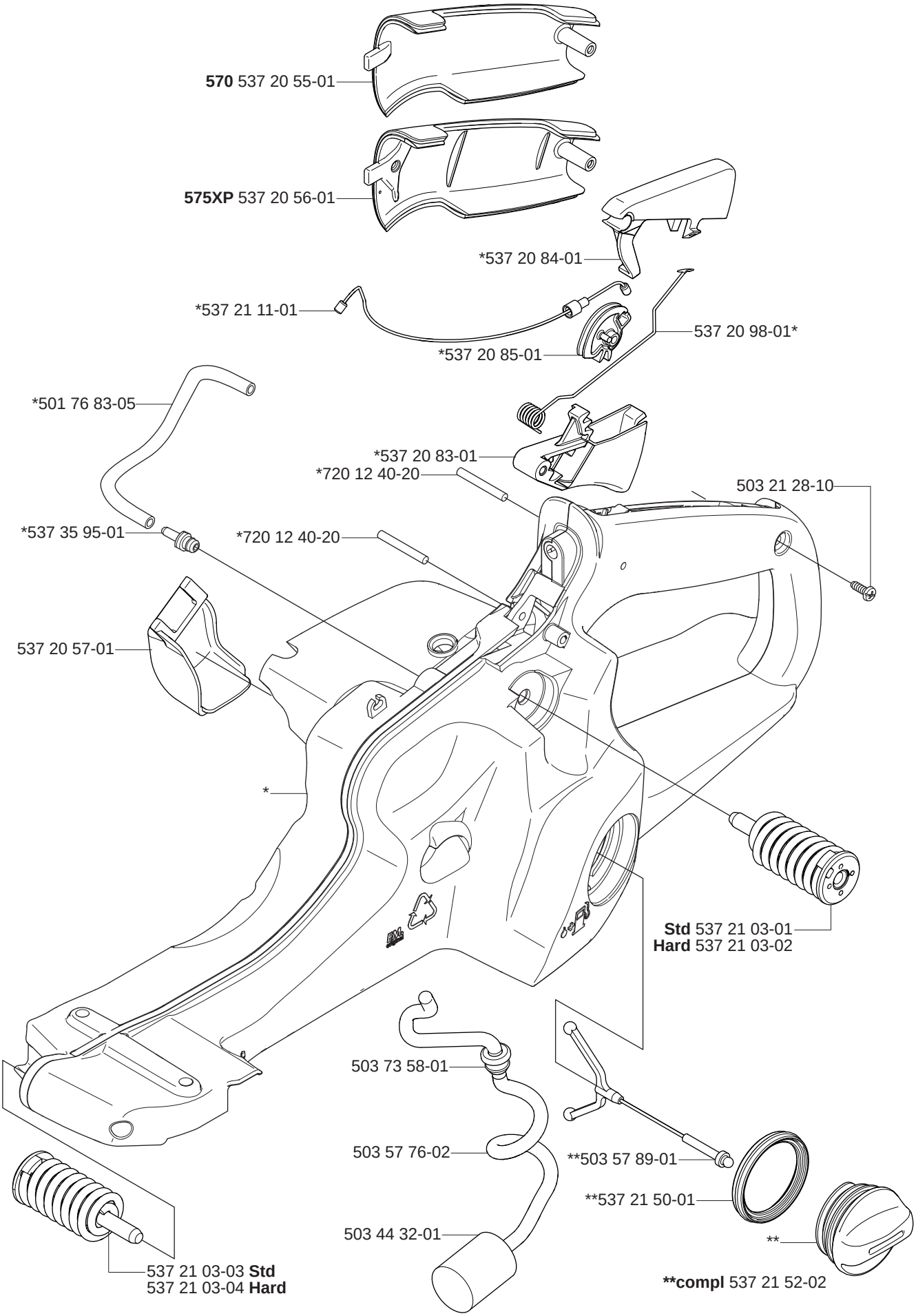

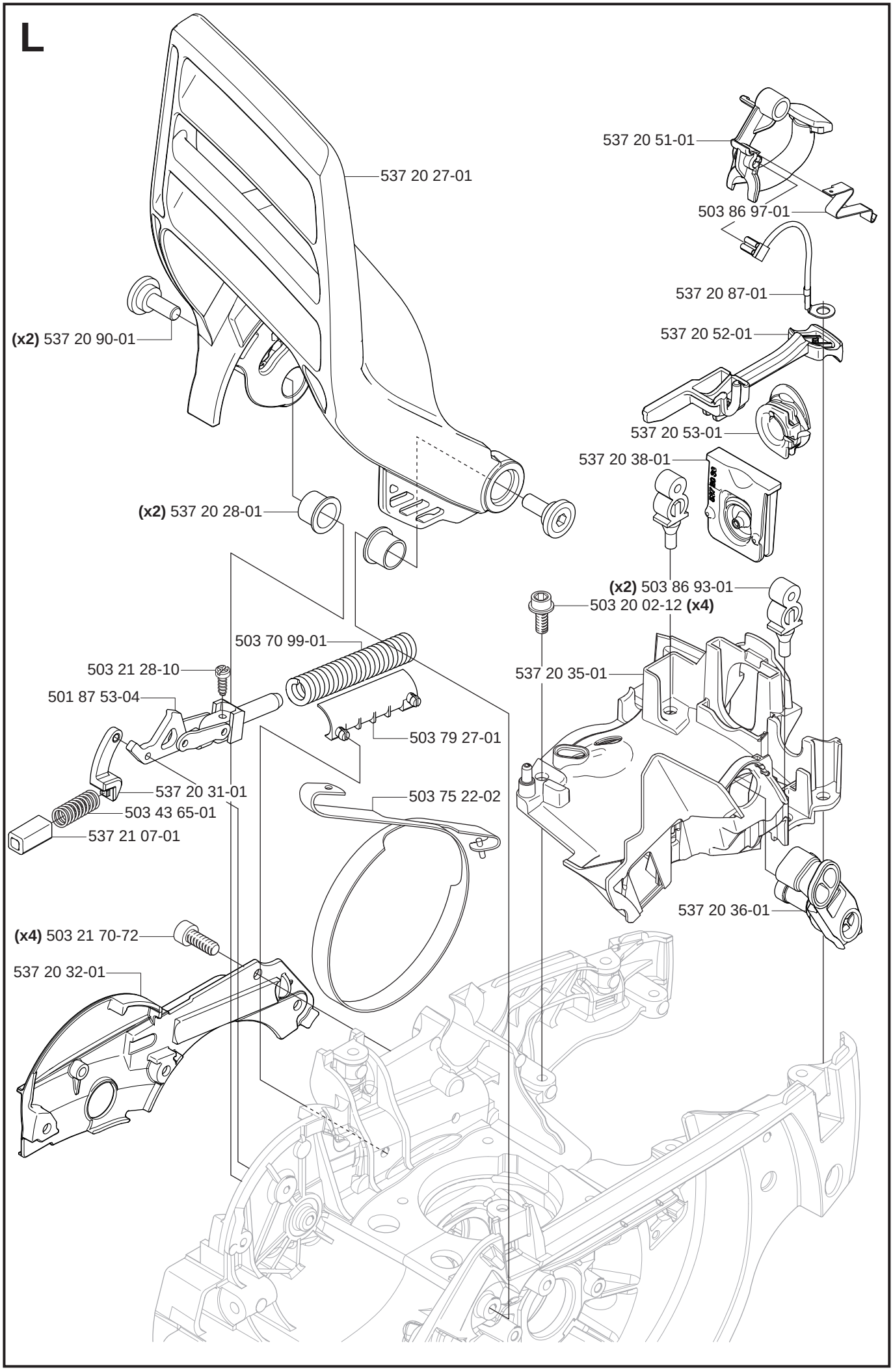
L
537 20 27-01
537 20 51-01
503 86 97-01
537 20 87-01
537 20 52-01
(x2) 537 20 90-01
537 20 53-01
537 20 38-01
(x2) 537 20 28-01
(x2) 503 86 93-01
503 20 02-12 (x4)
503 70 99-01
503 21 28-10
537 20 35-01
501 87 53-04
503 79 27-01
537 20 31-01
503 75 22-02
503 43 65-01
537 21 07-01
537 20 36-01
(x4) 503 21 70-72
537 20 32-01

M ***compl** 537 20 93-02

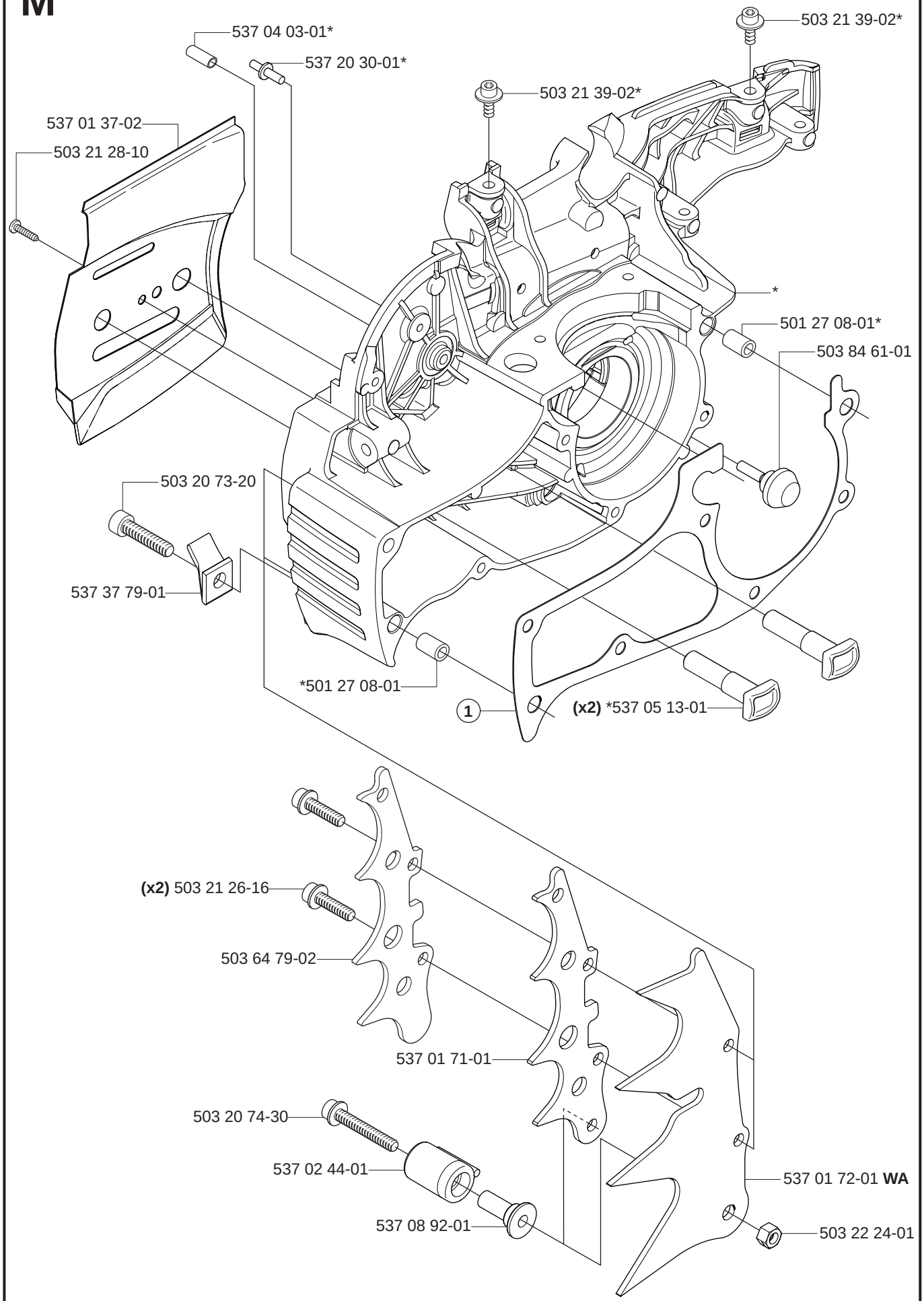

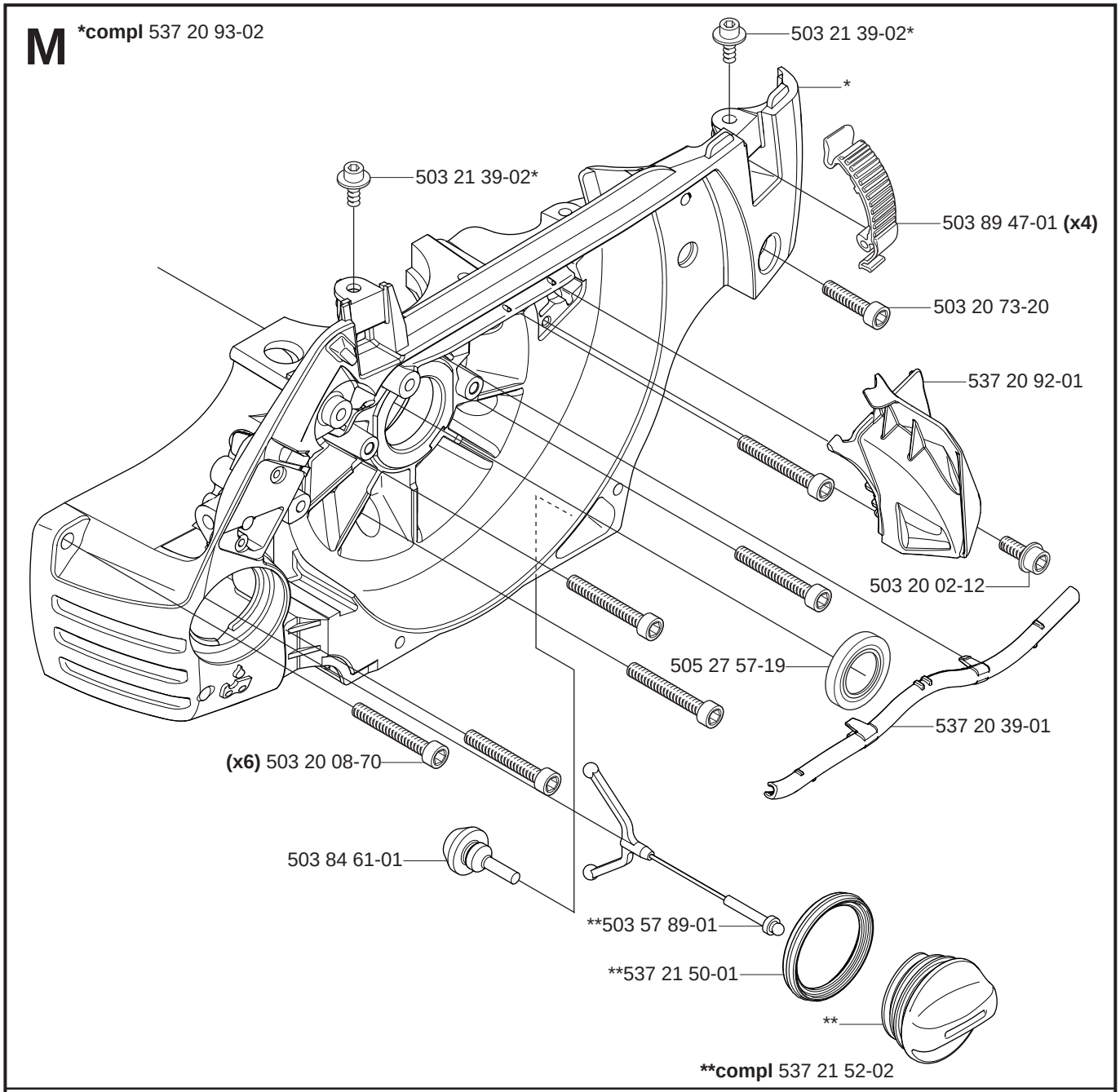
M
*compl 537 20 93-02
503 21 39-02*
*
503 21 39-02*
503 89 47-01 (x4)
503 20 73-20
537 20 92-01
503 20 02-12
505 27 57-19
537 20 39-01
(x6) 503 20 08-70
503 84 61-01
**503 57 89-01
**537 21 50-01
**
**compl 537 21 52-02

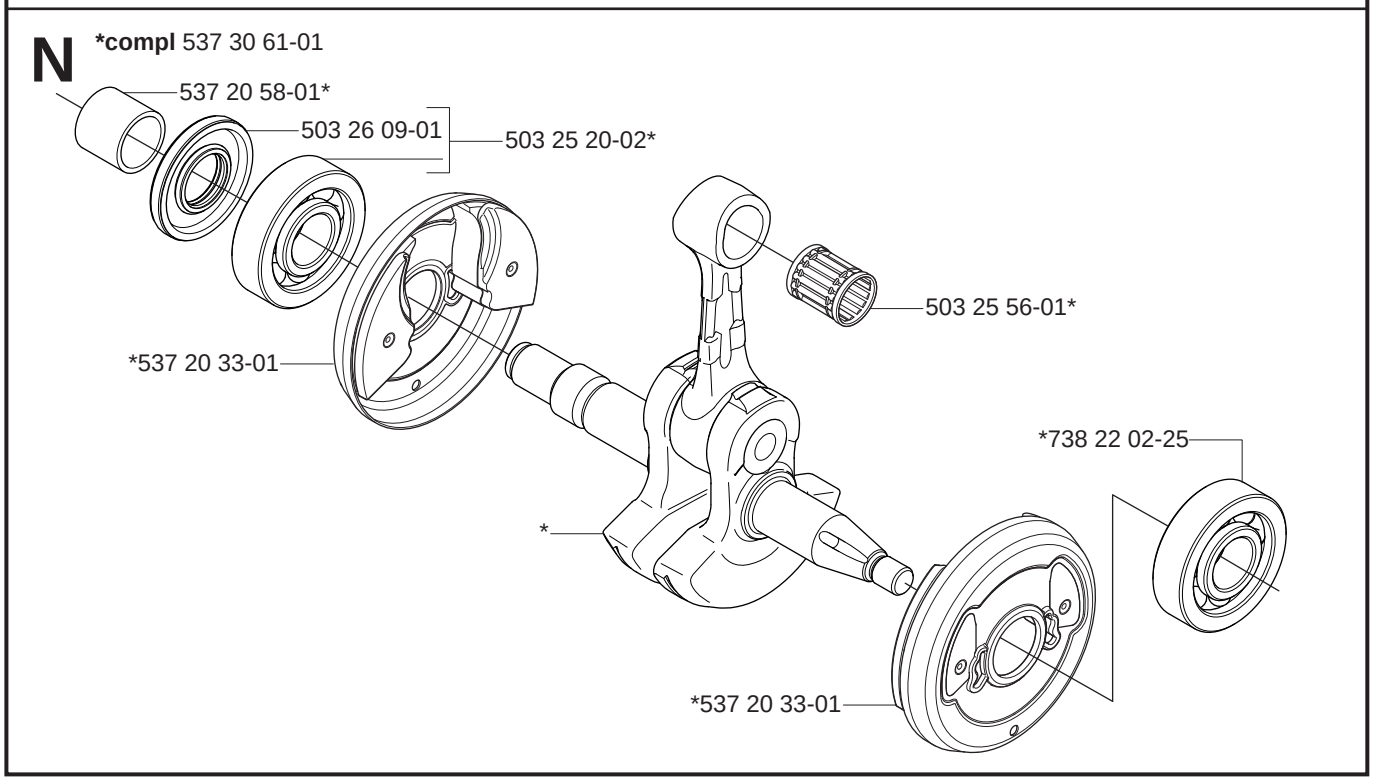
N
*compl 537 30 61-01
537 20 58-01*
503 26 09-01
503 25 20-02*
503 25 56-01*
*537 20 33-01
*738 22 02-25
*
*537 20 33-01

P ***compl** 503 28 33-01 **ZAMA C1M-EL28**

ZAMA C1M-EL28

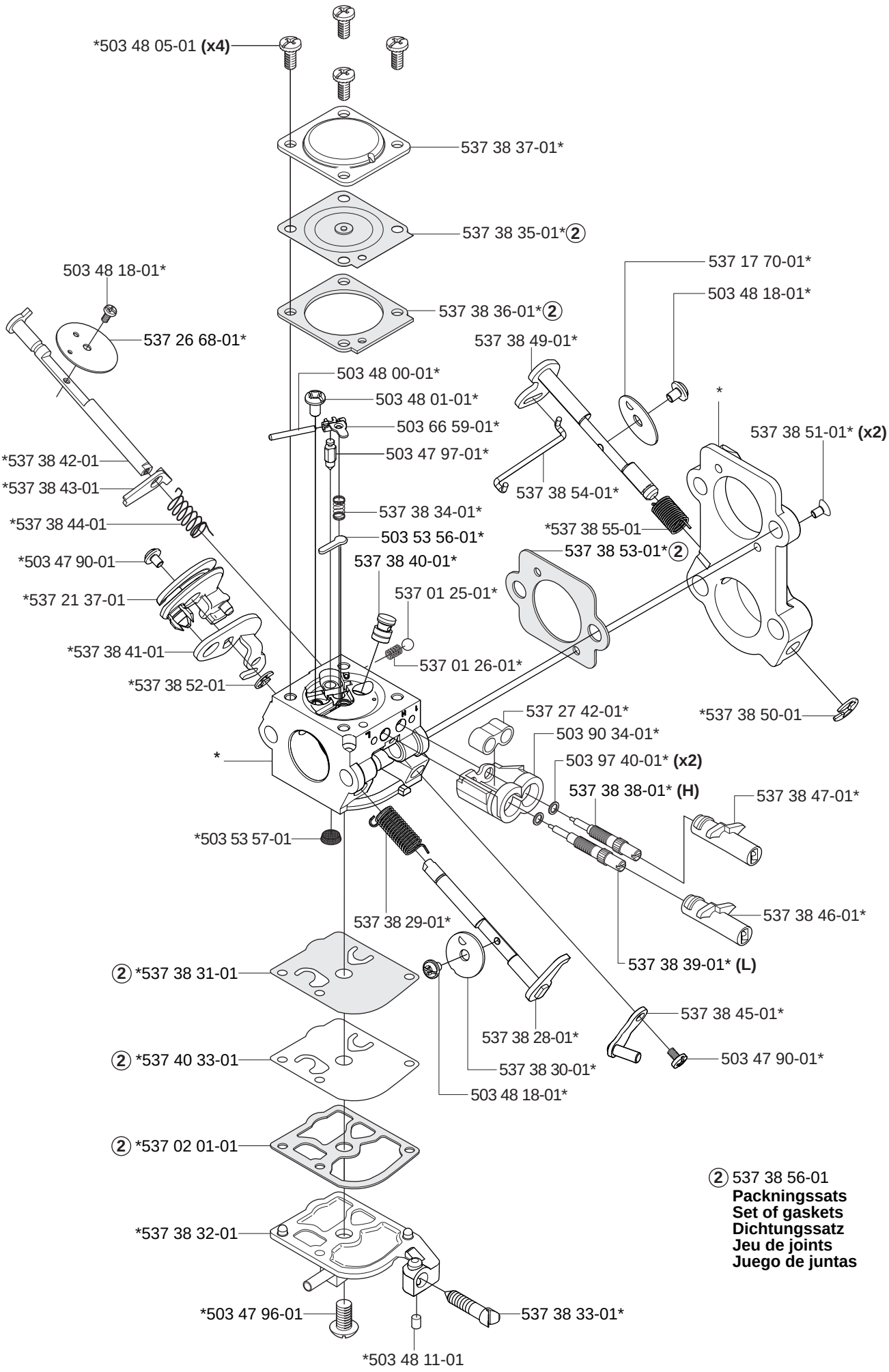

(2) 537 38 56-01
Packningssats
Set of gaskets
Dichtungssatz
Jeu de joints
Juego de juntas

Q

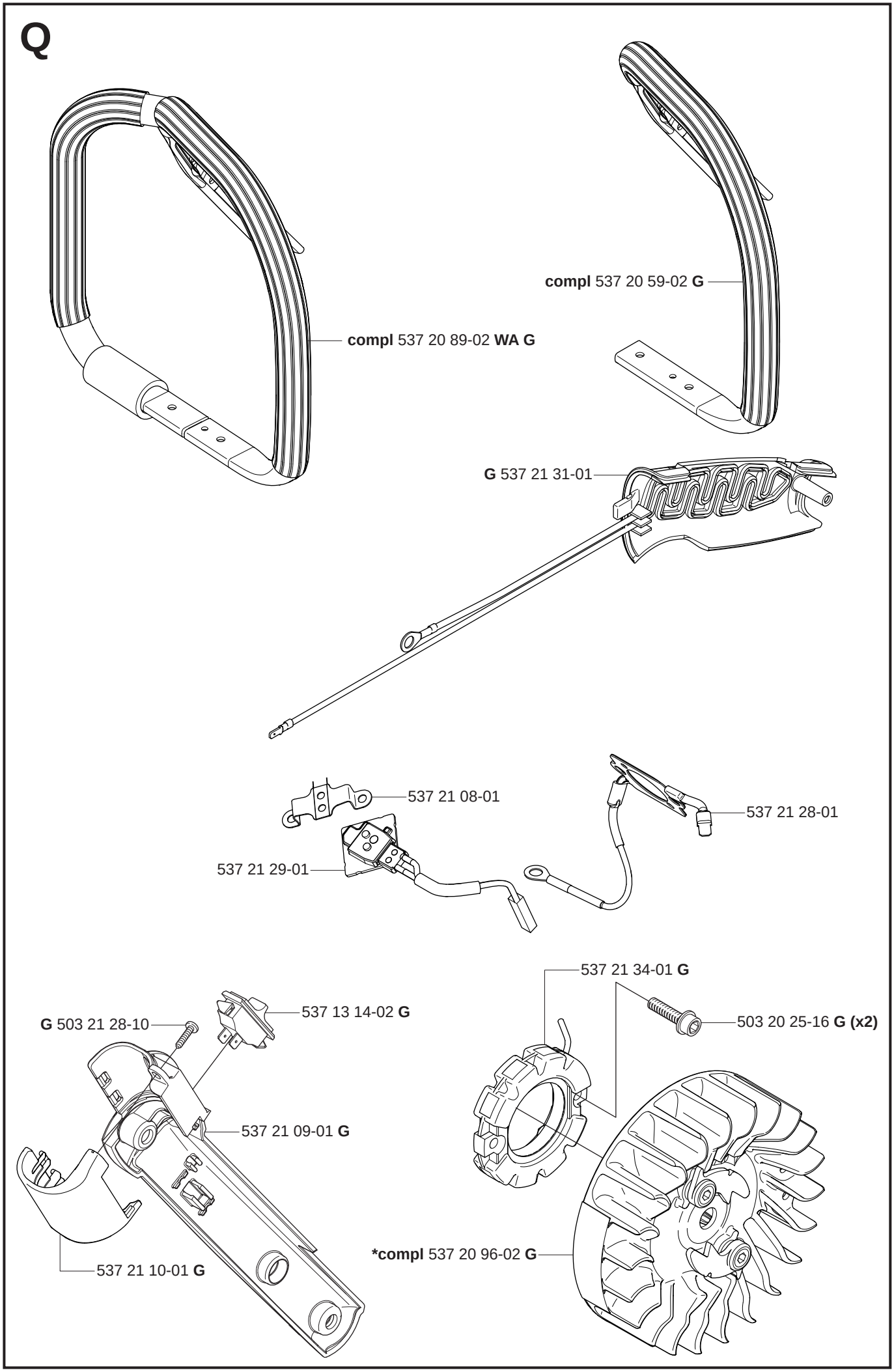
compl 537 20 89-02 WA G
compl 537 20 59-02 G
G 537 21 31-01
537 21 08-01
537 21 28-01
537 21 29-01
537 21 34-01 G
G 503 21 28-10
537 13 14-02 G
503 20 25-16 G (x2)
537 21 09-01 G
537 21 10-01 G
*compl 537 20 96-02 G

R

WINTER KIT
***compl** 537 21 24-01

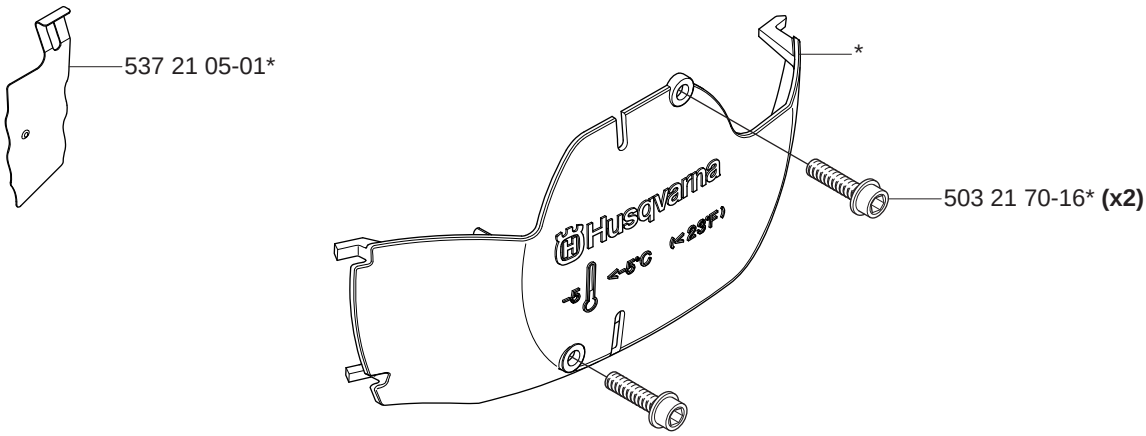

S

Tillbehör
Accessories
Zubehöre
Accessoires
Accesorios
***compl** 503 55 85-01

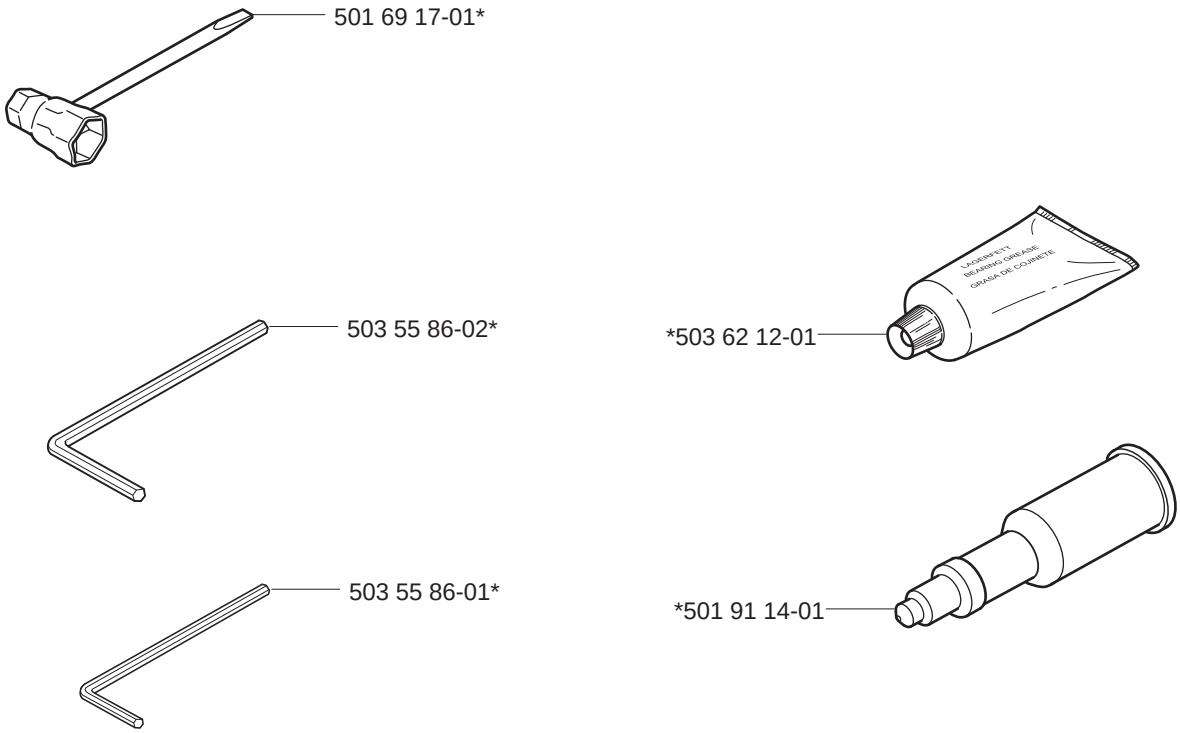

RECOMMENDED PARTS, ACCESSORIES, LUBRICANTS
575XP CHAIN SAW

	Item	Part Number	Description
Normal Maintenance Parts	Air Filter - Felt	537 20 75-01	
	Spark Plug	503 23 51-11	
	Fuel Filter	503 44 32-01	
	Ignition Module	537 27 74-01	
	Starter Housing Assy.	537 20 29-02	
	Switch On/Off	537 20 51-01	
	Front Handle	537 20 59-01	
	Wrap Handle	537 20 89-01	
	Chain Brake	537 03 35-01	
	Clutch Drum, (3/8"x7T)	537 03 62-02	
	Clutch Drum, (3/8"x8T)	537 03 62-03	
	Oil Gear	537 20 78-01	
	Fuel Cap	537 21 52-02	
	Oil Cap	537 21 52-02	
	Bar Nut	503 22 00-01	

	Item	Part Number	Description
Chainsaw Accessories	Bar	608 00 00-46	HT380-72, 20" Bar (3/8"),(.050")
		608 00 00-48	HT380-84, 24" Bar (3/8"),(.050")
		608 00 00-32	HA380-72, 20" Bar (3/8"),(.050")
		608 00 00-45	HT388-68, 18" Bar (3/8"),(.058")
		608 00 00-47	HT388-72, 20" Bar (3/8"),(.058")
		608 00 00-50	HT388-84, 24" Bar (3/8"),(.058")
		608 00 00-34	HA383-72, 20" Bar (3/8"),(.063")
	Chain	501 84 25-72	H46-72, 20" Chain (3/8"),(.050")
		501 84 25-84	H46-84, 24" Chain (3/8"),(.050")
		501 84 28-72	H48-72, 20" Chain (3/8"),(.058')
		501 84 28-84	H48-84, 24" Chain (3/8"),(.058')
		501 87 71-72	H45-72, 20: Chain (3/8"),(.063")
	Carrying Case	100 00 01-07	Orange Carrying Case with 20" Bar Protector
	File Kit	505 69 81-91	File Kit includes: File handle, Combination file guide, 2 round files, and 1 flat file. Use with H80 & H46 chains.

	Item	Part Number	Description
Lubricants	Bar and Chain	610 00 00-14	Bar and Chain Lubricant - 1 Quart
		610 00 00-34	Bar and Chain Lubricant - 1 Gallon
	XP Premium	610 00 00-85	XP Premium - 2.6 oz (1 Gallon Mix)
		610 00 00-82	XP Premium - 6.4 oz (2.5 Gallon Mix)

	Item	Part Number	Description
Protective Apparel	Protective Glasses	605 00 04-15	Lexa- Clear lens
		605 00 04-16	Lexa- Grey lens
	Helmets	505 67 53-15	Helmet System (Husqvarna)
	Protective Gloves	531 30 02-73	Xtreme Duty Work Gloves (Medium)
		531 30 02-74	Xtreme Duty Work Gloves (Large)
		531 30 02-75	Xtreme Duty Work Gloves (X-Large)
	Chaps	605 00 00-13	Pro Forest Apron Chaps (Navy Blue)
		605 00 00-14	Pro Forest Apron Chaps (Orange)

570 EPA & 575 XP

Part Number	Description	Square		Part Number	Description	Square	
501 27 08-01	SLEEVE	M		503 55 22-01	CYLINDER PLUG	H	
501 48 54-02	SPARK PLUG CONN. KIT	D		503 55 85-01	TOOL KIT	S	
501 51 72-01	CHAIN GUIDE	A		503 55 86-01	L-SPANNER	S	
501 54 41-02	OIL SCREEN	B		503 55 86-02	L-SPANNER	S	
501 59 80-02	68210 RIMSPROCKET	B		503 57 76-02	HOSE	K	
501 61 58-01	SPRING	B		503 57 89-01	HOLDER	K	
501 67 32-01	PAWL	D		503 57 89-01	HOLDER	M	
501 67 35-01	SPRING	D		503 62 12-01	GREASE	S	
501 69 17-01	COMBI TOOL	S		503 62 49-01	PLUG	B	
501 76 83-05	HOSE	K		503 63 75-02	ANTIVIBE MOUNT	J	
501 81 99-01	SCREW M5X14	D		503 63 75-03	VIBRATION ABSORBER	J	
501 87 53-04	KNEE JOINT	L		503 64 79-02	FELLING DOG	M	
501 89 53-01	HOSE	B		503 66 59-01	LEVER	P	
501 91 14-01	GREASE GUN	S		503 70 99-01	BRAKE SPRING	L	
502 20 65-01	SCREW	F		503 71 97-01	FELLING DOG	A	
502 20 83-02	KNOB	F		503 73 58-01	FUEL TANK BUSHING	K	
503 20 02-16	SCREW	F,L,M		503 74 44-05	CLUTCH SPRING	B	
503 20 02-20	SCREW	D		503 75 22-02	BRAKE BAND	L	
503 20 08-70	SCREW	M		503 75 24-01	WASHER	B	
503 20 25-16	SCREW	Q		503 76 29-02	PROTECTOR	A	
503 20 25-20	SCREW	F		503 76 64-02	SCREEN	G	
503 20 34-19	SCREW	C		503 79 27-01	SUPPORT	L	
503 20 39-01	SCREW 4X46	F		503 81 13-01	SCREW	B	
503 20 47-01	SCREW	J		503 81 30-01	SPRING CLIP	B	
503 20 52-16	SCREW	C		503 84 61-01	BUFFER	M	
503 20 53-01	SCREW	B		503 86 17-71	CLUTCH DRUM	B	
503 20 73-20	SCREW	G,M		503 86 93-01	SUPPORT	L	
503 20 74-30	SCREW	M		503 86 97-01	SPRING	L	
503 21 26-16	SCREW	F,M		503 89 47-01	BUCKLE	M	
503 21 28-10	SCREW	A,K,L,M,Q		503 89 70-01	WASHER	A	
503 21 29-10	SCREW	C		503 90 34-01	SLEEVE	P	
503 21 39-02	SCREW	M		503 92 27-01	FELLING DOG	A	
503 21 39-02	SCREW	M		503 97 40-01	WASHER	P	
503 21 70-16	SCREW	R		503 98 74-01	DECAL	E	
503 21 70-72	SCREW	L		503 99 83-01	COUPLING	A	
503 21 88-74	SCREW	J		505 27 57-19	SEAL RING	M	
503 22 00-01	NUT M8 FLANGE	A		505 30 36-61	22273 SPROCKET	B	
503 22 04-01	NUT W/ WASHER	D		505 30 51-25	STARTER ROPE	C	
503 22 24-01	NUT	M		537 01 25-01	BALL	P	
503 22 65-03	NUT	F		537 01 26-01	SPRING	P	
503 22 66-01	NUT	J		537 01 37-02	BAR PLATE	M	
503 23 00-04	WASHER 6.1X9	B		537 01 68-01	COVER	A	
503 23 00-42	WASHER	D		537 01 71-01	FELLING DOG	M	
503 23 00-63	WASHER	A		537 01 72-01	FELLING DOG	M	
503 23 00-66	WASHER	A		537 01 74-01	SLEEVE	A	
503 23 51-08	SPARK PLUG RCJ7Y	H		537 02 01-01	GASKET	P	
503 23 51-11	BPMR7A NGK SPARK PLUG	H		537 02 44-01	SPACER	M	
503 25 20-02	BEARING	N		537 03 35-01	CHAIN BRAKE COVER	A	
503 25 56-01	NEEDLE BEARING	H		537 03 38-03	DECAL	A	
503 25 56-01	NEEDLE BEARING	N		537 03 62-02	CLUTCH DRUM	B	
503 26 09-01	SEALING	N		537 03 73-01	PLATE	J	
503 27 21-01	RETAINING RING	B		537 04 03-01	VALVE	M	
503 28 33-01	CARBURETOR	F,P		537 04 34-01	CHAIN GUIDE	A	
503 28 90-46	PISTON RING	H		537 04 41-02	KIT-CHAIN TENSIONER	A	
503 28 90-47	PISTON RING	H		537 05 13-01	BOLT	M	
503 43 20-01	CLUTCH DRUM BEARING	B		537 07 94-01	ADJUSTER	A	
503 43 65-01	LOCK SPRING	L		537 07 95-01	ADJUSTER	A	
503 44 32-01	FUEL FILTER	K		537 08 92-01	NUT	M	
503 47 90-01	SCREW	P		537 13 14-02	SWITCH	Q	
503 47 96-01	SCREW	P		537 17 41-01	PROTECTOR	A	
503 47 97-01	INLET NEEDLE	P		537 17 70-01	THROTTLE FLAP	P	
503 48 00-01	PIN FULCRUM	P		537 20 23-01	STARTER COVER	C	
503 48 05-01	SCREW	P		537 20 26-01	PLATE	C	
503 48 11-01	PLUG	P		537 20 27-01	CHAIN BRAKE	L	
503 48 18-01	SCREW	P		537 20 28-01	BUSHING	C	
503 52 13-03	OIL PUMP	B		537 20 28-01	BUSHING	L	
503 52 15-01	PUMP PISTON	B		537 20 29-02	STARTER ASSY COMPLETE	C	
503 53 56-01	PLUG	P		537 20 30-01	PIN	M	
503 53 57-01	STRAINER	P		537 20 31-01	LEVER	L	

570 EPA & 575 XP

Part Number	Description	Square		Part Number	Description	Square	
537 20 32-01	LOCK	L		537 21 31-01	COVER	Q	
537 20 33-01	CUP	N		537 21 34-01	GENERATOR	Q	
537 20 35-01	BASE	L		537 21 35-04	TANK UNIT	K	
537 20 36-01	SLEEVE	L		537 21 37-01	LEVER	F,P	
537 20 37-01	HOSE	F		537 21 50-01	SEALING	K	
537 20 38-01	GROMMET	L		537 21 50-01	SEALING	M	
537 20 39-01	HOLDER	M		537 21 52-02	TANK CAP	K,M	
537 20 43-01	PIPE	F		537 23 25-01	HANDLE	C	
537 20 45-01	FLANGE	F		537 25 41-02	CYLINDER	H	
537 20 47-01	PARTITION	F		537 25 45-02	CYLINDER	H	
537 20 49-01	FLANGE	F		537 25 47-02	PISTON 49 MM	H	
537 20 50-01	FILTER HOLDER	F		537 26 68-01	CHOKE FLAP	P	
537 20 51-01	CONTROL	L		537 27 42-01	SLEEVE	P	
537 20 52-01	CHOKE CONTROL	L		537 27 74-01	IGNITION MODULE	D	
537 20 53-01	SEALING	L		537 28 32-01	SLEEVE	C	
537 20 55-01	COVER	K		537 28 34-01	SPRING	C	
537 20 56-01	COVER	K		537 29 44-01	VALVE	H	
537 20 57-01	PROTECTOR	K		537 30 61-01	CRANKSHAFT	N	
537 20 58-01	SLEEVE	N		537 32 85-02	PISTON 51 MM	H	
537 20 59-01	FRONT HANDLE	J		537 33 10-01	CLUTCH COVER ASSY	A	
537 20 59-02	HANDLE	Q		537 35 95-01	FUEL TANK VENT	K	
537 20 66-01	AIR FILTER	F		537 36 06-01	SPRING	B	
537 20 66-02	AIR FILTER	F		537 37 79-01	CHAIN CATCHER	M	
537 20 66-03	AIR FILTER	F		537 38 28-01	THROTTLE SHAFT	P	
537 20 71-01	PLUG	E,H		537 38 29-01	SPRING	P	
537 20 75-01	AIR FILTER	F		537 38 30-01	FLAP	P	
537 20 78-01	PINION	B		537 38 31-01	PUMP DIAPHRAGM	P	
537 20 80-01	GASKET	H		537 38 32-01	COVER	P	
537 20 82-01	GASKET	G		537 38 33-01	SCREW	P	
537 20 83-01	THROTTLE TRIGGER	K		537 38 34-01	SPRING	P	
537 20 84-01	THROTTLE LOCK	K		537 38 35-01	DIAPHRAGM	P	
537 20 85-01	LEVER	K		537 38 36-01	GASKET	P	
537 20 86-01	SHORTING LEAD	D		537 38 37-01	COVER	P	
537 20 87-01	CABLE	L		537 38 38-01	NEEDLE HIGH SPEED	P	
537 20 89-01	HANDLE	J		537 38 39-01	LOW SPEED NEEDLE	P	
537 20 89-02	HANDLE	Q		537 38 40-01	JET	P	
537 20 90-01	SCREW	L		537 38 41-01	LEVER	P	
537 20 91-01	HOSE	B		537 38 42-01	CHOKE SHAFT	P	
537 20 92-01	JET	M		537 38 43-01	LEVER	P	
537 20 96-01	FLYWHEEL	D		537 38 44-01	SPRING	P	
537 20 96-02	FLYWHEEL	Q		537 38 45-01	LEVER	P	
537 20 98-01	SPRING	K		537 38 46-01	LIMITER	P	
537 21 03-01	VIBRATION ABSORBER	K		537 38 47-01	LIMITER	P	
537 21 03-02	VIBRATION ABSORBER	K		537 38 49-01	SHAFT	P	
537 21 03-03	VIBRATION ABSORBER	K		537 38 50-01	CLIP	P	
537 21 03-04	VIBRATION ABSORBER	K		537 38 51-01	SCREW	P	
537 21 04-01	ADAPTER	F		537 38 52-01	CLIP	P	
537 21 05-01	COVER	E,R		537 38 53-01	GASKET	P	
537 21 06-01	CONDUCTOR	G		537 38 54-01	ROD	P	
537 21 07-01	GUIDE	L		537 38 55-01	SPRING	P	
537 21 08-01	HOLDER	Q		537 38 56-01	GASKET SET	P	
537 21 09-01	COVER	Q		537 40 33-01	DIAPHRAGM	P	
537 21 10-01	COVER	Q		720 12 40-20	PIN 3X25	K	
537 21 11-01	THROTTLE WIRE	K		724 12 87-59	SCREW	G	
537 21 21-02	DECAL	C		725 53 33-55	SCREW MC6S 5X25	H	
537 21 21-03	DECAL	C		725 53 70-55	SCREW MC6S 6X20	G	
537 21 24-01	WINTER SET	R		731 23 14-01	NUT	F	
537 21 25-01	CYLINDER COVER	E		737 43 12-00	WRIST PIN CLIP	H	
537 21 25-02	CYLINDER COVER	E		738 22 02-25	BALL BEARING-6202-C3 SKF	N	
537 21 28-01	HANDLE CIRCUIT	Q		740 48 07-02	O-RING	A	
537 21 29-01	THERMOSTAT	Q					