Husqvarna

SERVICE

I0400113

IPL, 455 Rancher, 2004-10, 106 40 11-61

455 Rancher

Spare parts
Ersatzteile
Pièces détachées
Reserve onderdelen
Repuestos
Reservdelar

106 40 11-61

PART NUMBER	SQUARE NOTE
501 46 69-01	N
501 46 84-01	N
501 46 85-01	N
501 46 87-01	N
501 46 87-01	N
501 48 54-02	E
501 66 61-01	N
501 69 17-01	P
501 76 83-25	G
502 21 36-01	N
503 20 02-16	G
503 20 05-27	H
503 20 34-30	C
503 21 02-16	M
503 21 02-16	M
503 21 29-10	D
503 21 53-20	E
503 21 55-25	G
503 21 68-20	K
503 21 70-10	A
503 21 70-10	A
503 21 70-10	A
503 21 70-10	K
503 21 70-16	Q
503 21 73-21	D
503 21 74-12	L
503 21 74-16	B
503 21 74-16	B
503 21 74-50	G
503 21 77-16	D
503 21 88-25	M
503 21 88-25	M
503 21 88-25	M
503 21 99-02	H
503 21 99-02	H
503 22 00-01	A
503 22 04-01	E
503 22 69-02	L
503 23 00-60	B
503 23 00-60	B
503 23 00-63	A
503 23 51-11	H
503 24 09-06	B
503 24 09-06	H
503 24 09-06	J
503 25 16-01	J
503 25 16-01	J
503 25 52-01	B
503 26 19-01	J
503 26 19-01	J
503 28 21-01	G
503 28 21-01	N
503 28 90-50	H
503 40 59-01	Q
503 42 43-01	H
503 43 65-01	K
503 44 32-01	L
503 46 59-01	A
503 56 34-01	N
503 56 42-01	N
503 57 42-01	N
503 57 43-01	N
503 57 76-02	L
503 57 89-01	L
503 57 89-01	L
503 58 42-01	N
503 58 46-01	N
503 73 58-01	L
503 73 58-01	L
503 78 32-01	E

PART NUMBER	SQUARE NOTE
503 79 05-02	E
503 80 04-01	N
503 85 41-01	M
503 85 52-01	A
503 86 80-01	N
503 86 92-01	M
503 86 92-01	M
503 86 93-01	K
503 86 97-01	G
503 89 08-02	A
503 89 15-01	B
503 89 16-01	B
503 89 16-01	B
503 89 24-01	K
503 89 29-01	A
503 91 06-71	P
503 91 39-01	N
503 91 40-01	N
503 91 45-01	N
503 91 54-01	N
503 92 31-01	M
503 93 51-01	N
503 93 66-01	L
503 97 38-01	K
503 98 74-01	C
503 99 86-01	M
504 13 08-08	N
504 13 09-06	N
504 21 00-49	N
504 21 00-50	N
504 35 09-06	N
505 30 51-25	D
505 31 67-17	N
505 31 67-36	N
505 31 67-36	N
505 31 67-54	N
505 52 01-25	N
505 52 01-27	N
530 02 61-19	K
530 03 50-15	N
537 00 34-01	N
537 00 34-01	N
537 01 74-01	A
537 02 71-01	B
537 04 24-02	L
537 04 24-08	L
537 04 30-01	A
537 06 93-01	B
537 06 93-01	B
537 07 94-02	A
537 08 00-01	B
537 08 90-01	A
537 09 25-01	D
537 10 55-02	B
537 10 80-01	A
537 11 05-01	B
537 16 21-05	E
537 21 50-01	L
537 21 50-01	L
537 21 51-02	L
537 21 51-02	L
537 21 52-02	L
537 21 52-02	L
537 22 78-01	K
537 22 84-01	B
537 23 05-01	M
537 23 06-01	M
537 23 07-01	M
537 23 25-01	D
537 23 61-01	G

PART NUMBER	SQUARE NOTE
537 24 08-01	L
537 24 14-01	G
537 24 15-01	G
537 24 17-01	D
537 24 29-01	M
537 24 56-01	E
537 24 57-01	H
537 24 57-01	K
537 24 58-01	H
537 24 58-01	K
537 25 15-01	F
537 25 23-01	F
537 25 26-01	B
537 25 29-01	B
537 25 55-01	G
537 25 56-01	G
537 25 57-01	G
537 25 57-02	G
537 25 57-03	G
537 26 04-01	K
537 26 05-01	M
537 26 08-01	G
537 26 09-01	D
537 26 14-01	B
537 26 14-01	B
537 26 15-01	B
537 26 15-01	B
537 26 24-01	M
537 27 13-01	K
537 27 27-01	E
537 27 80-01	L
537 28 20-02	K
537 28 23-01	K
537 28 32-01	D
537 28 41-01	D
537 28 42-01	D
537 28 43-01	K
537 28 63-01	A
537 28 64-01	A
537 28 65-01	A
537 28 66-01	A
537 28 76-01	F
537 28 77-01	F
537 29 16-02	B
537 29 17-02	B
537 29 27-01	E
537 29 30-02	H
537 29 65-01	K
537 29 86-01	A
537 30 46-01	M
537 30 49-01	G
537 30 62-01	N
537 30 89-01	C
537 31 05-01	H
537 31 40-01	J
537 31 79-01	L
537 32 04-02	H
537 32 10-01	G
537 32 30-01	G
537 32 33-01	D
537 32 33-01	D
537 33 21-01	B
537 33 21-01	B
537 35 60-01	Q
537 40 35-01	K
537 40 66-01	N
537 40 67-01	N
537 40 68-01	N
537 40 69-01	N
537 40 70-01	N

PART NUMBER	SQUARE NOTE
537 40 71-01	N
537 40 72-01	N
537 40 73-01	N
537 40 74-01	N
537 40 75-01	N
537 40 76-01	N
537 40 77-01	N
537 40 78-01	N
537 40 79-01	N
537 40 80-01	N
537 40 81-01	N
537 40 82-01	N
537 40 83-01	N
537 40 84-01	N
537 40 85-01	N
537 40 86-01	N
537 40 87-01	N
537 40 88-01	N
537 40 89-01	N
537 40 90-01	N
537 40 91-01	N
537 40 92-01	N
537 40 93-01	N
721 11 64-30	B
725 53 68-55	F
735 31 08-20	A
737 43 12-00	H
740 48 07-02	A

Set of gaskets, Dichtungssats,
Jeu de joints, Juego de juntas,
Packningssats

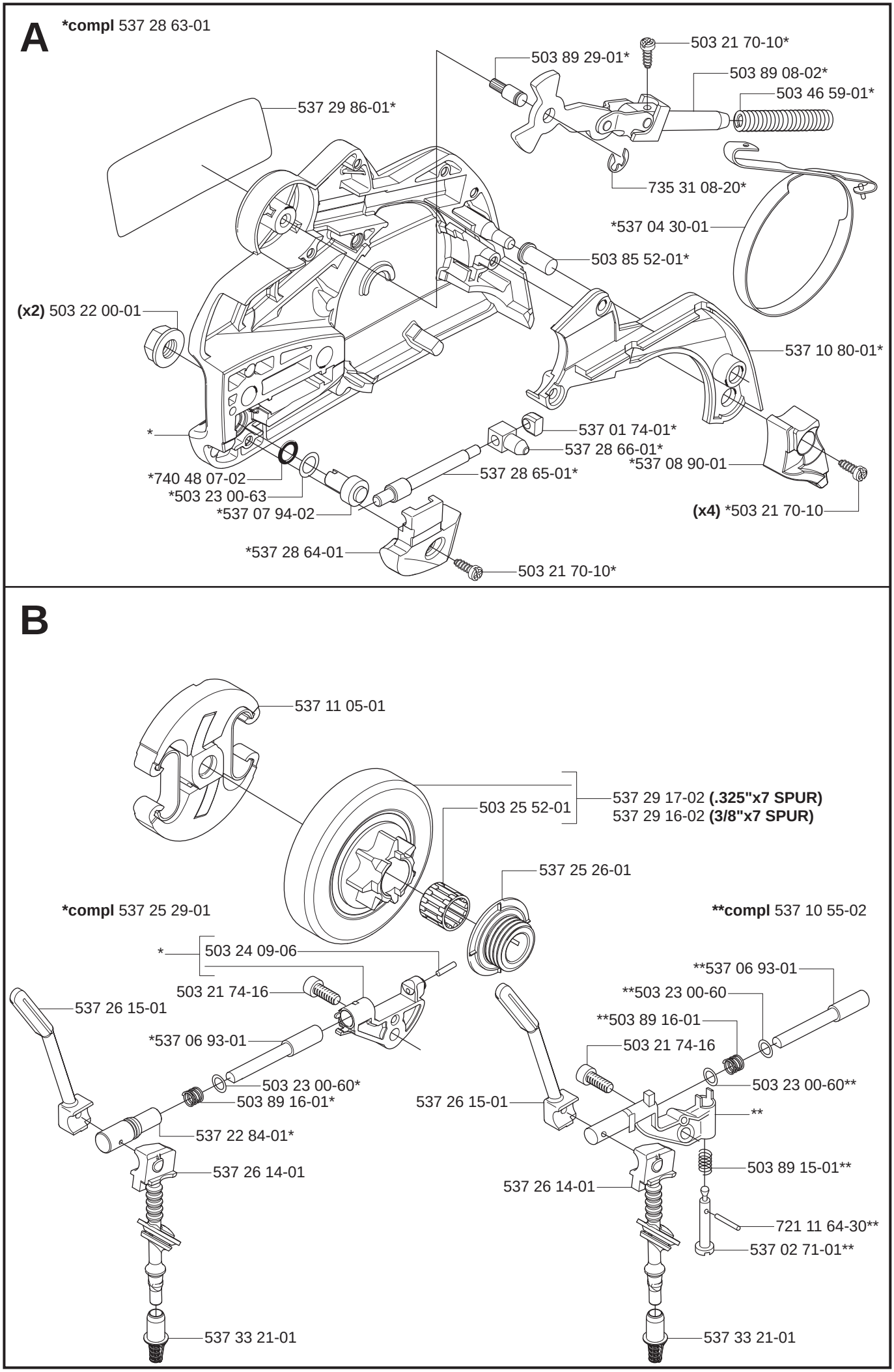
A
*compl 537 28 63-01
503 21 70-10*
503 89 29-01*
503 89 08-02*
503 46 59-01*
537 29 86-01*
735 31 08-20*
*537 04 30-01
503 85 52-01*
(x2) 503 22 00-01
537 10 80-01*
*
537 01 74-01*
537 28 66-01*
*537 08 90-01
*740 48 07-02
537 28 65-01*
*503 23 00-63
*537 07 94-02
(x4) *503 21 70-10
*537 28 64-01
503 21 70-10*
B
537 11 05-01
537 29 17-02 (.325"x7 SPUR)
503 25 52-01
537 29 16-02 (3/8"x7 SPUR)
537 25 26-01
*compl 537 25 29-01
**compl 537 10 55-02
*
503 24 09-06
503 21 74-16
537 26 15-01
*537 06 93-01
503 23 00-60*
503 89 16-01*
537 22 84-01*
537 26 14-01
537 33 21-01
**537 06 93-01
**503 23 00-60
**503 89 16-01
503 21 74-16
503 23 00-60**
537 26 15-01
**
503 89 15-01**
537 26 14-01
721 11 64-30**
537 02 71-01**
537 33 21-01

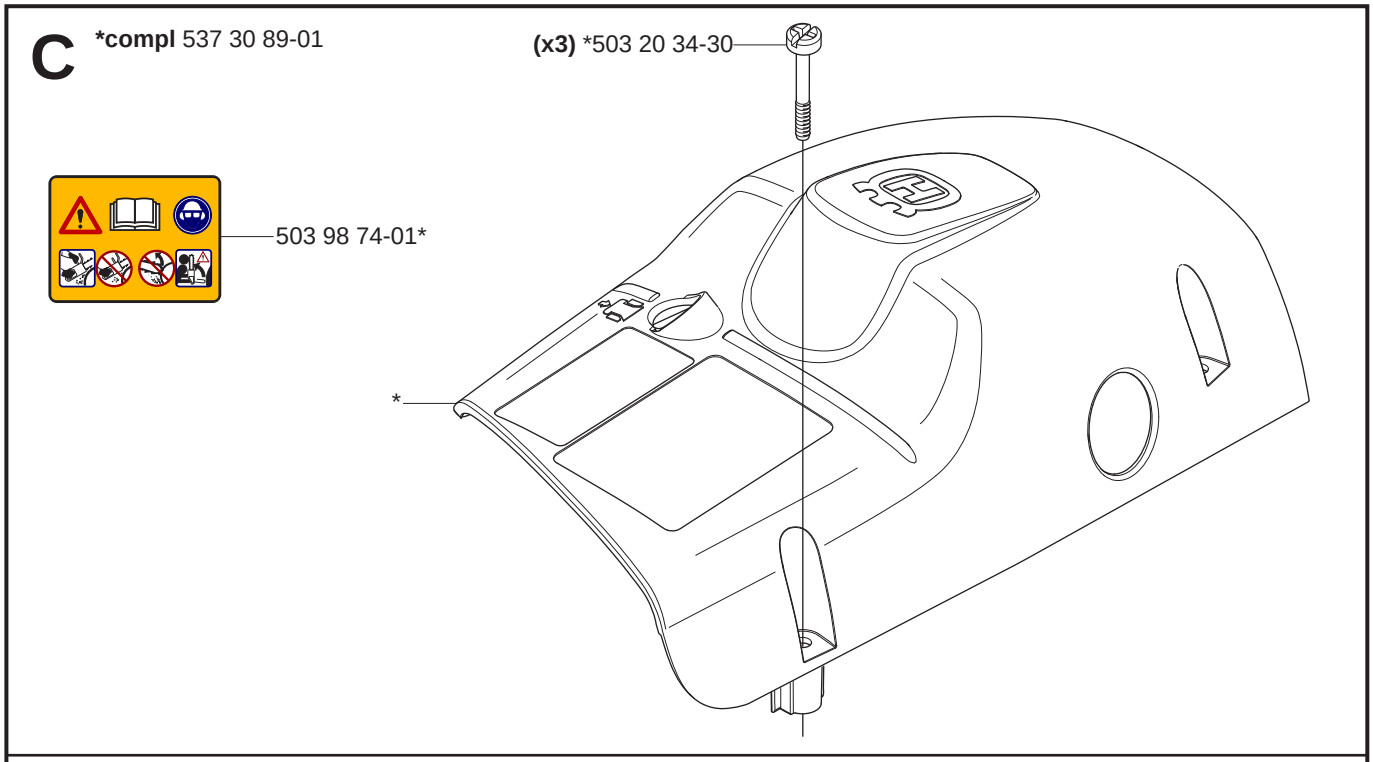
C
*compl 537 30 89-01
(x3) *503 20 34-30
503 98 74-01*
*

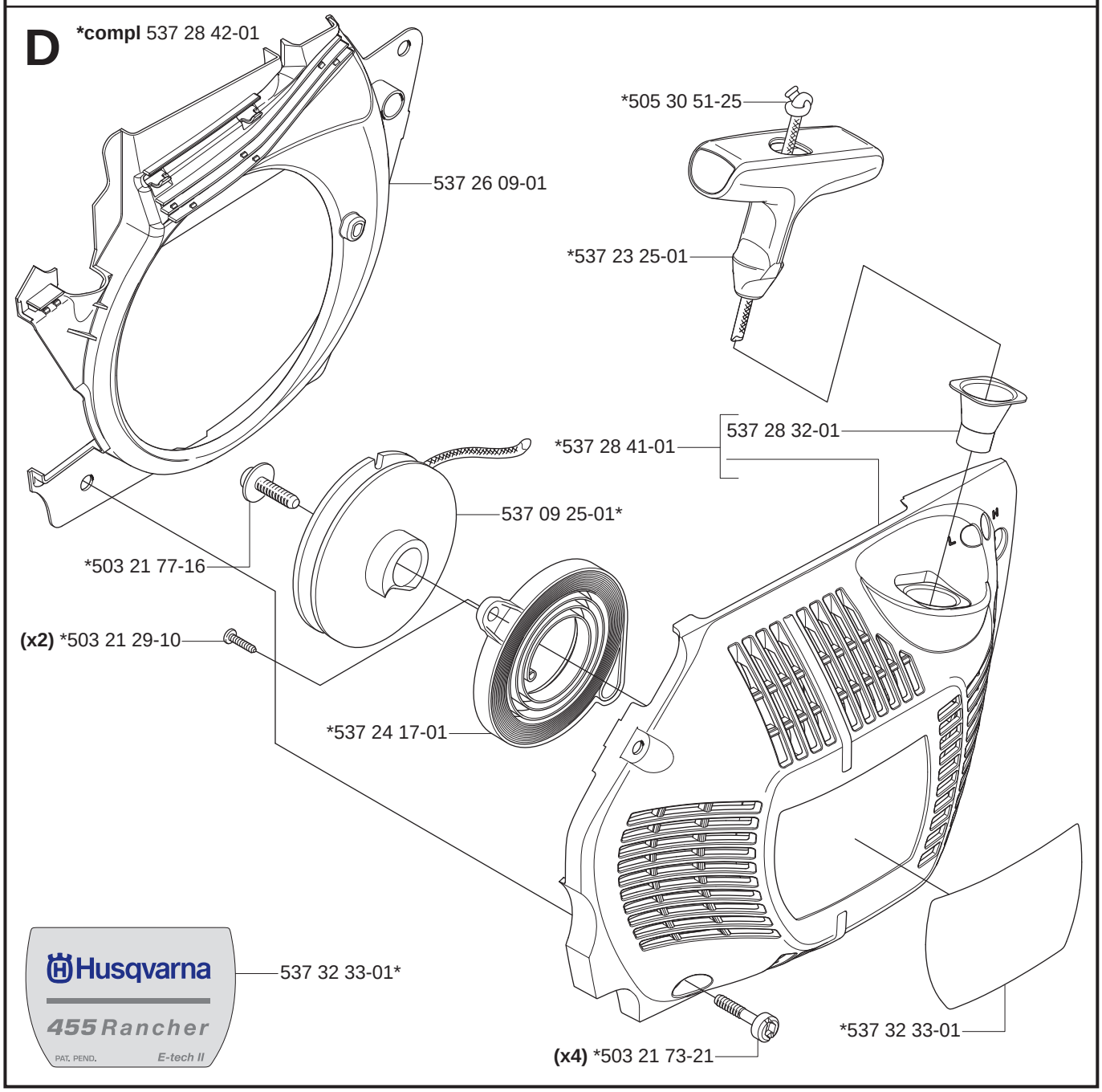
D
*compl 537 28 42-01
537 26 09-01
*505 30 51-25
*537 23 25-01
537 28 32-01
*537 28 41-01
537 09 25-01*
*503 21 77-16
(x2) *503 21 29-10
*537 24 17-01
Husqvarna
455 Rancher
PAT. PEND.
E-tech II
537 32 33-01*
*537 32 33-01
(x4) *503 21 73-21

E

503 22 04-01

*501 48 54-02

(x2) 503 78 32-01

(x2) 537 24 56-01

(x2) 503 79 05-02

***compl** 537 29 27-01

537 27 27-01

***compl** 537 16 21-05

503 21 53-20* **(x2)**

F

***compl** 537 25 15-01

537 25 23-01*

537 28 77-01

*

537 28 76-01

(x3) 725 53 68-55

G

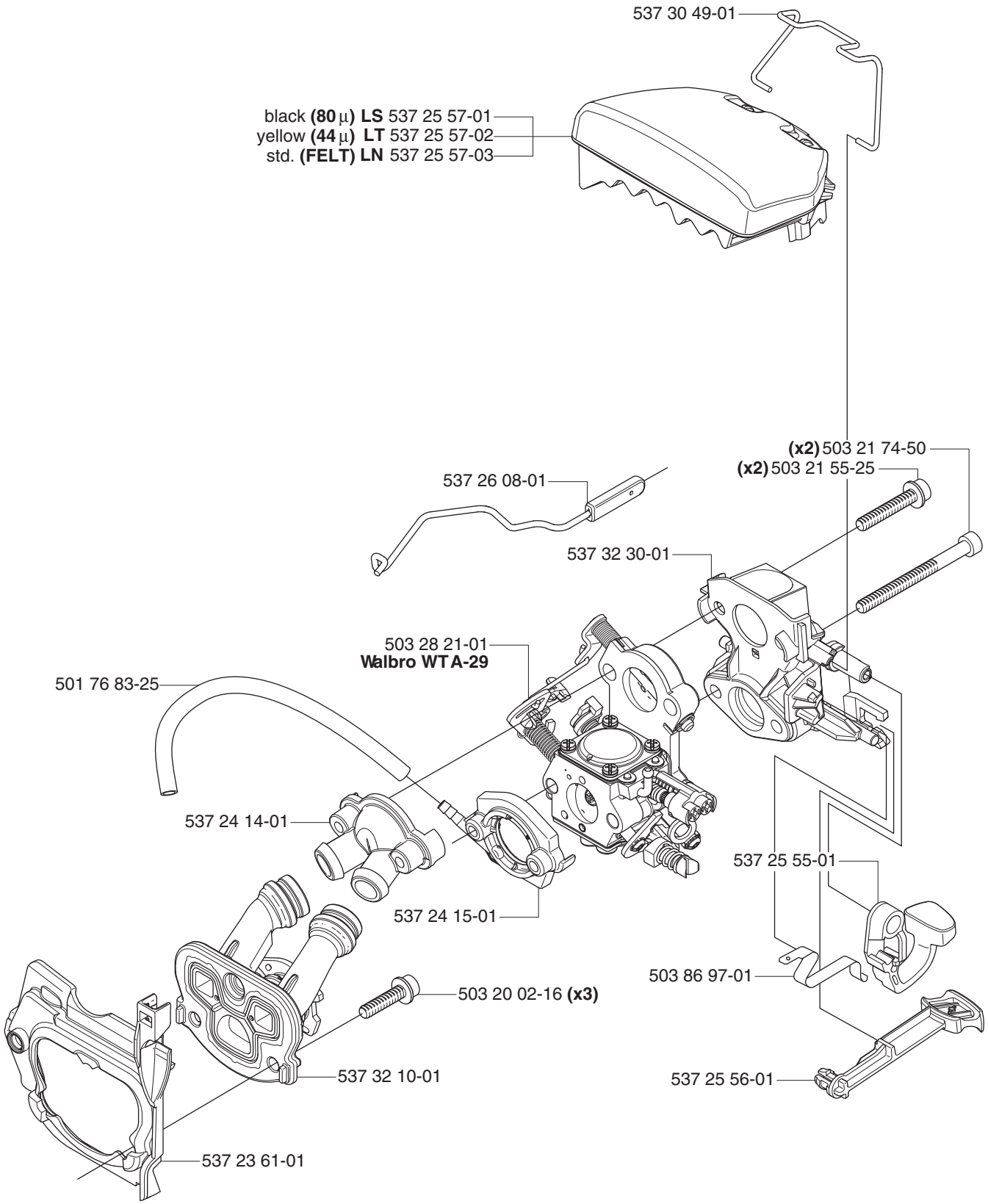
537 30 49-01
black (80 µ) LS 537 25 57-01
yellow (44 µ) LT 537 25 57-02
std. (FELT) LN 537 25 57-03
(x2) 503 21 74-50
(x2) 503 21 55-25
537 26 08-01
537 32 30-01
503 28 21-01
Walbro WTA-29
501 76 83-25
537 24 14-01
537 25 55-01
537 24 15-01
503 86 97-01
503 20 02-16 (x3)
537 32 10-01
537 25 56-01
537 23 61-01

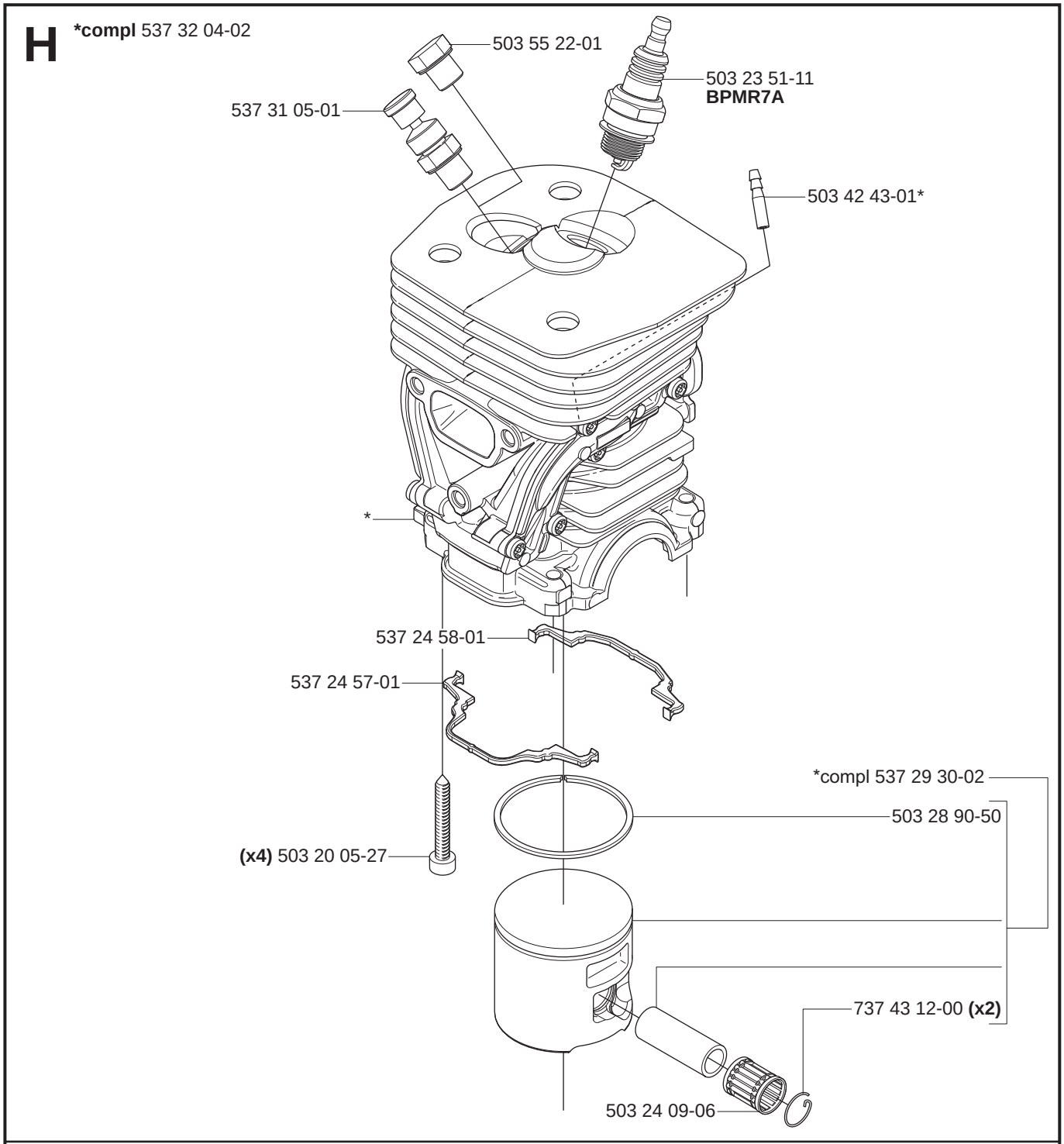
H
*compl 537 32 04-02
503 55 22-01
503 23 51-11
BPMR7A
537 31 05-01
503 42 43-01*
*
537 24 58-01
537 24 57-01
*compl 537 29 30-02
503 28 90-50
(x4) 503 20 05-27
737 43 12-00 (x2)
503 24 09-06

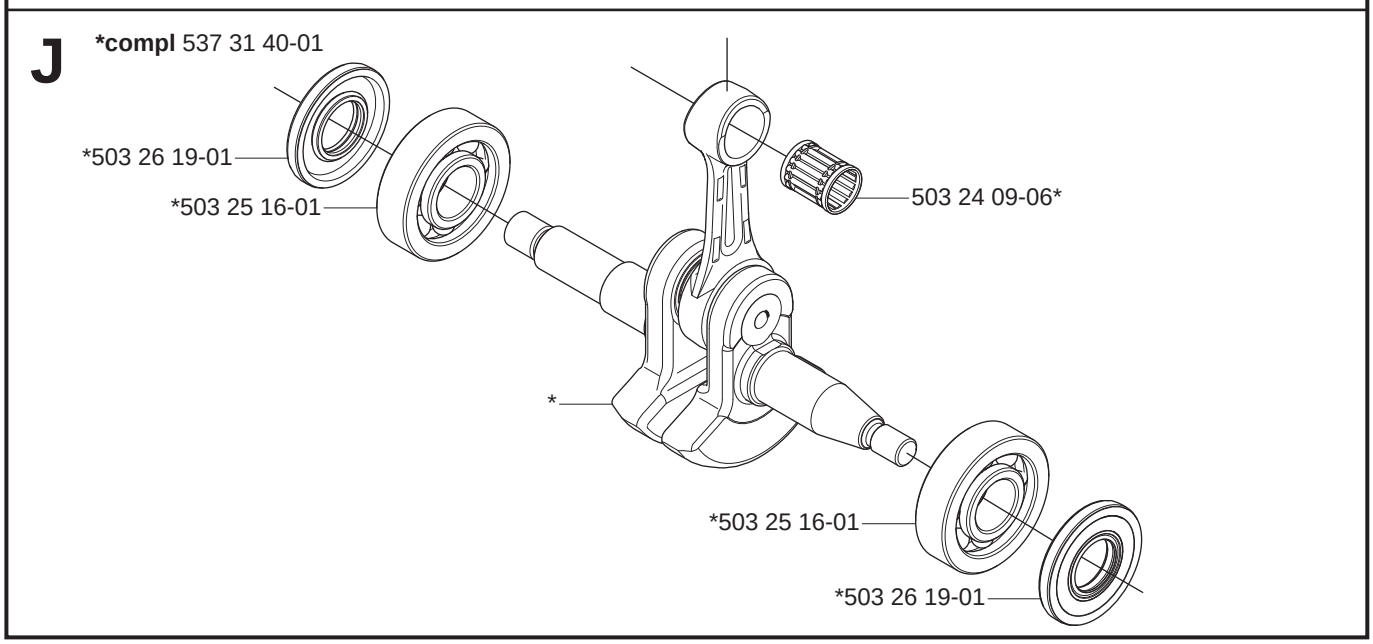
J
*compl 537 31 40-01
*503 26 19-01
*503 25 16-01
503 24 09-06*
*
*503 25 16-01
*503 26 19-01

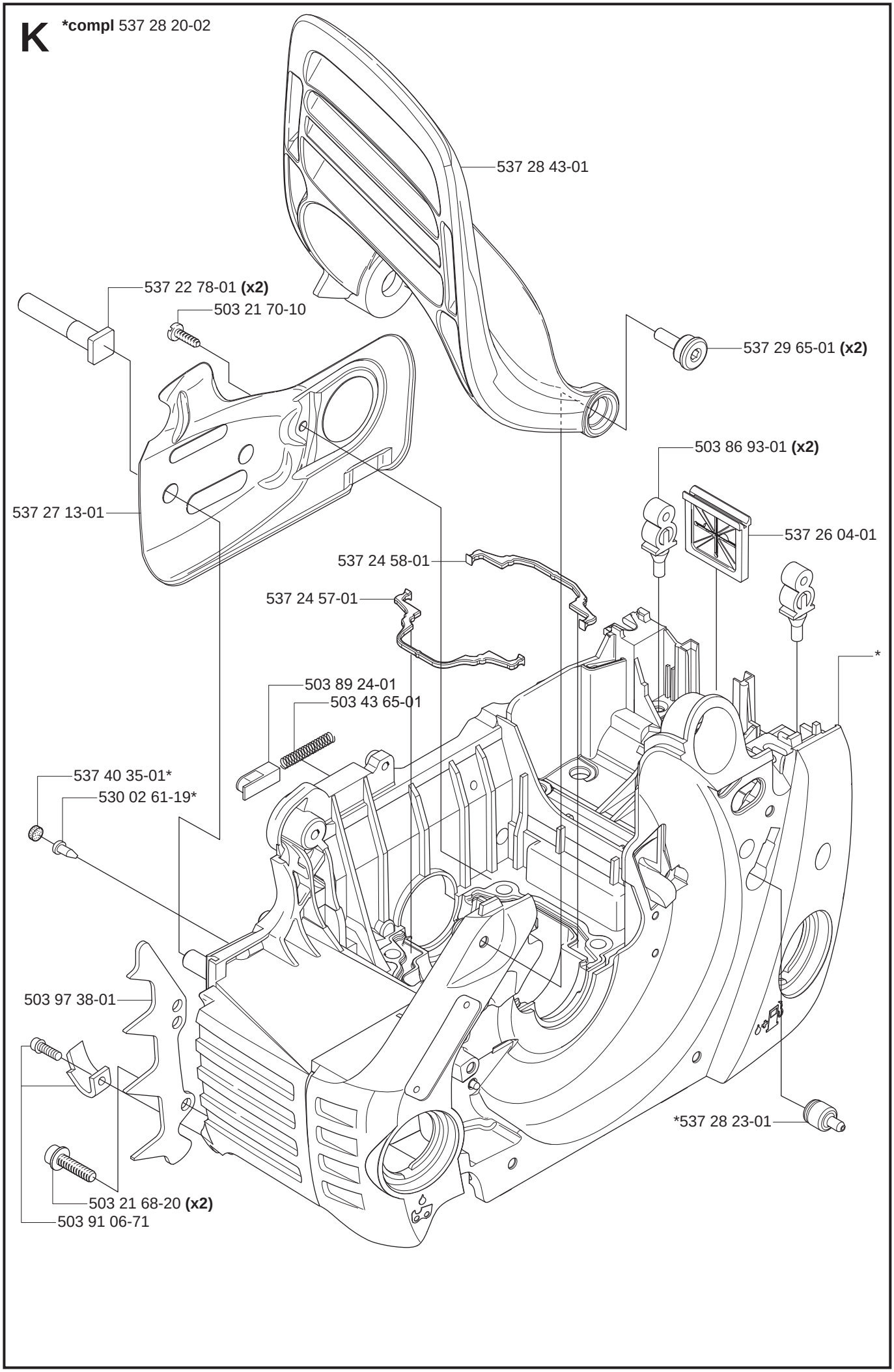
K
*compl 537 28 20-02
537 28 43-01
537 22 78-01 (x2)
503 21 70-10
537 29 65-01 (x2)
503 86 93-01 (x2)
537 27 13-01
537 26 04-01
537 24 58-01
537 24 57-01
*
503 89 24-01
503 43 65-01
537 40 35-01*
530 02 61-19*
503 97 38-01
*537 28 23-01
503 21 68-20 (x2)
503 91 06-71

L

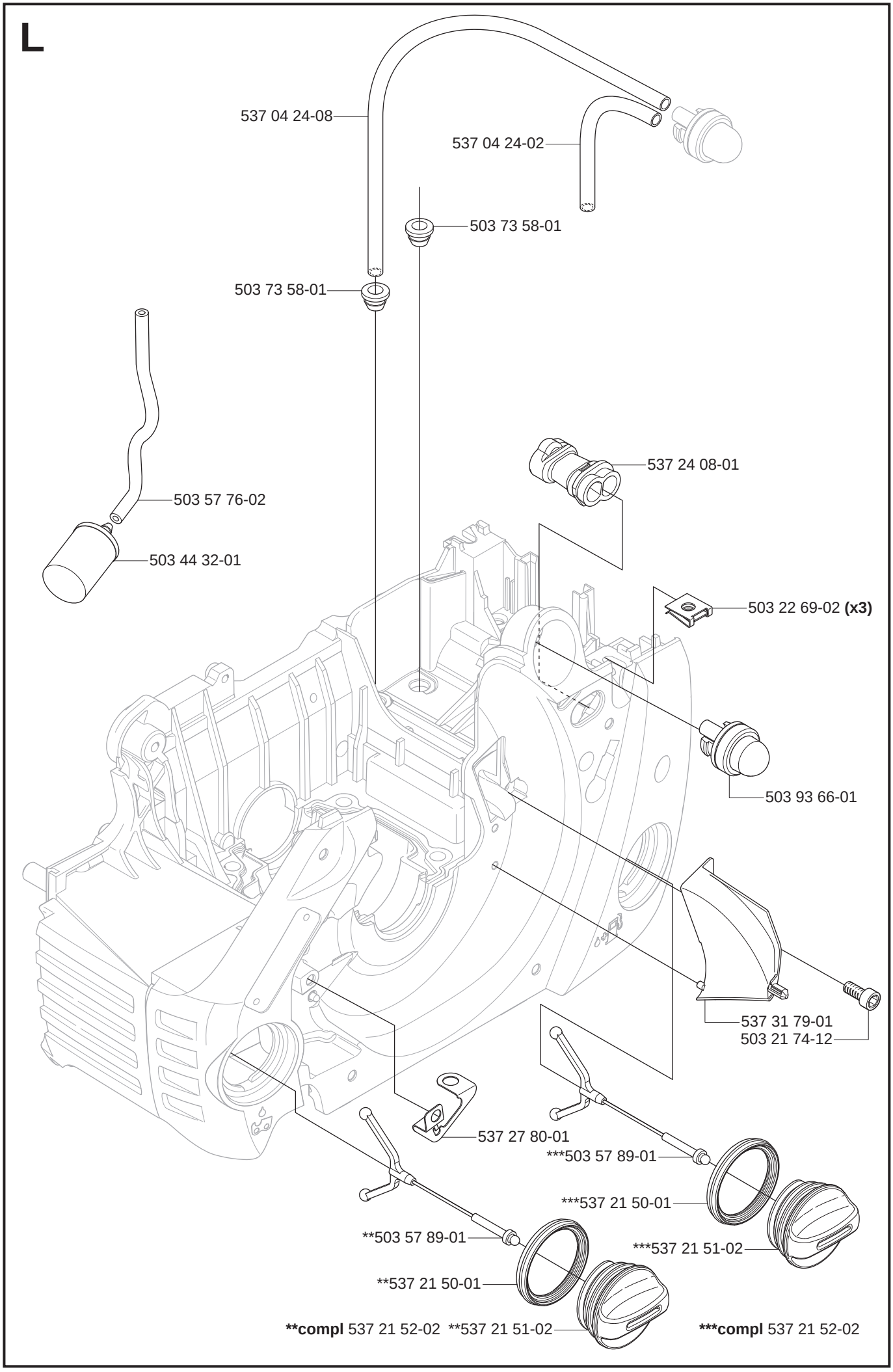
537 04 24-08
537 04 24-02
503 73 58-01
503 73 58-01
503 57 76-02
503 44 32-01
537 24 08-01
503 22 69-02 **(x3)**
503 93 66-01
537 31 79-01
503 21 74-12
537 27 80-01
***503 57 89-01
***537 21 50-01
**503 57 89-01
***537 21 51-02
**537 21 50-01
compl 537 21 52-02 **537 21 51-02
***compl** 537 21 52-02

M

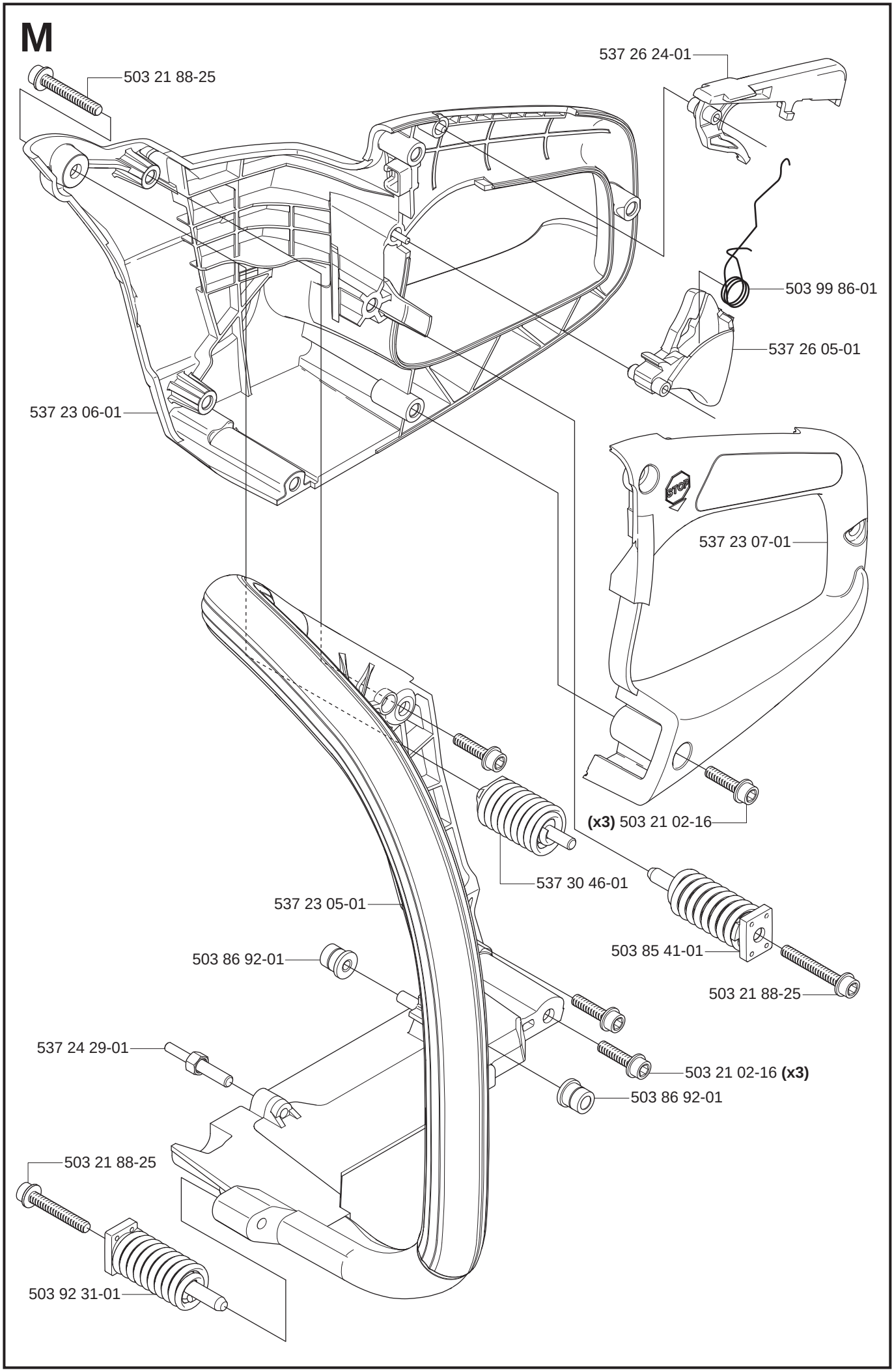
503 21 88-25
537 26 24-01
503 99 86-01
537 26 05-01
537 23 06-01
537 23 07-01
STOP
(x3) 503 21 02-16
537 30 46-01
537 23 05-01
503 85 41-01
503 86 92-01
503 21 88-25
537 24 29-01
503 21 02-16 (x3)
503 86 92-01
503 21 88-25
503 92 31-01

N

***compl** 503 28 21-01 **Walbro WTA-29**

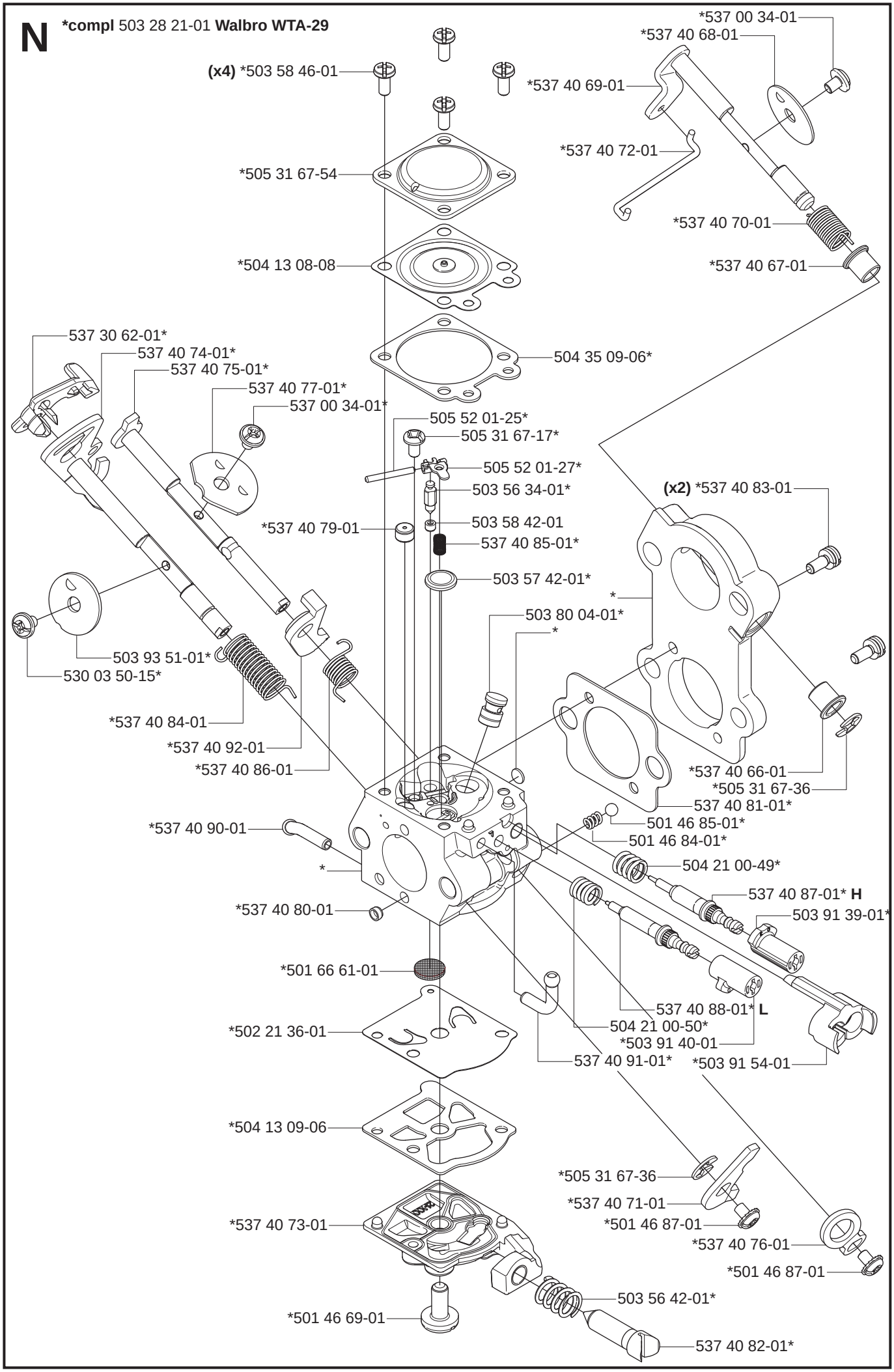

P

Tillbehör
Accessories
Zubehöre
Accessoires
Accesorios

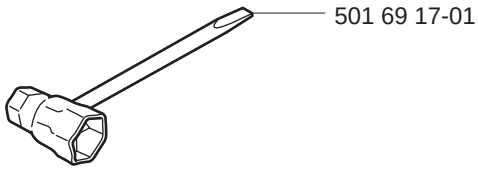

Q

WINTER KIT
***compl** 537 35 60-01

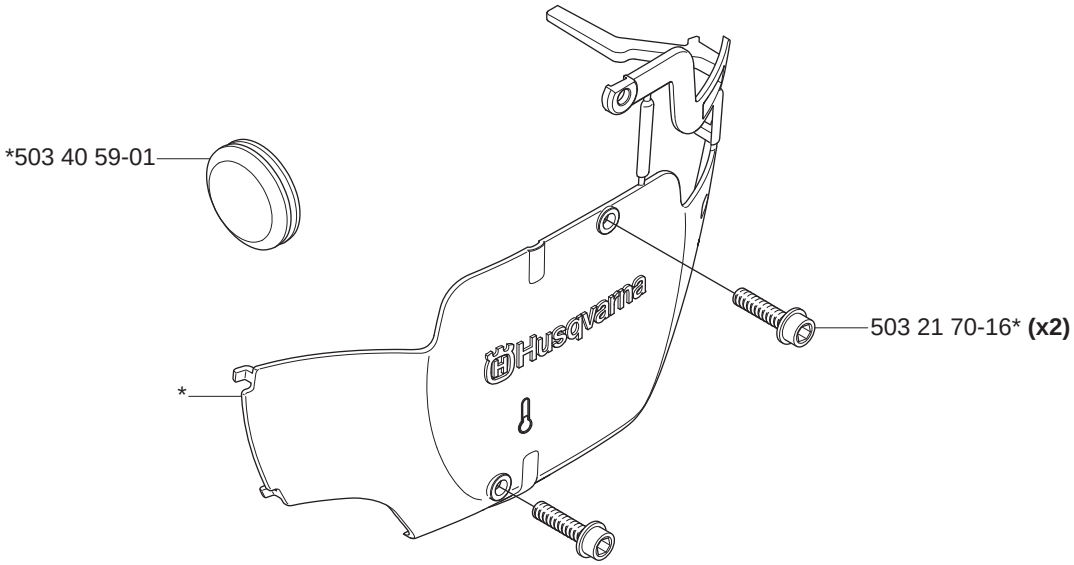

RECOMMENDED PARTS, ACCESSORIES, LUBRICANTS

455 RANCHER CHAIN SAW

	Item	Part Number	Description
Normal Maintenance Parts	Air Filter - Felt	537 25 57-01	
	Air Filter - Nylon	537 25 57-03	
	Spark Plug	503 23 51-11	
	Fuel Filter	503 44 32-01	
	Primer Bubble	503 93 66-01	
	Ignition Module	537 16 21-05	
	Starter Housing Assy.	537 28 42-01	
	Switch On/Off	537 25 55-01	
	Front Handle, Left	537 23 07-01	
	Front Handle, Right	537 23 06-01	
	Chain Brake	537 28 63-01	
	Oil Gear	537 25 26-01	
	Fuel Cap	537 21 52-02	
	Oil Cap	537 21 52-02	
	Bar Nut	503 22 00-01	
	Item	**Part Number**	**Description**
Chainsaw Accessories	Bar	608 00 01-56	FT280-68, 18" Bar (3/8"),(.050")
		608 00 01-57	FT280-72, 20" Bar (3/8"),(.050")
	Chain	501 84 65-68	H80-68, 18" Chain (3/8"),(.050")
		501 84 65-72	H80-72, 18" Chain (3/8"),(.050")
	Carrying Case	100 00 01-07	Orange Carrying Case with 20" Bar Protector
	File Kit	505 69 81-91	File Kit includes: File handle, Combination file guide, 2 round files, and 1 flat file. Use with H80 & H46 chains.
	Item	**Part Number**	**Description**
Lubricants	Bar and Chain	610 00 00-14	Bar and Chain Lubricant - 1 Quart
		610 00 00-34	Bar and Chain Lubricant - 1 Gallon
	XP Premium	610 00 00-85	XP Premium - 2.6 oz (1 Gallon Mix)
		610 00 00-82	XP Premium - 6.4 oz (2.5 Gallon Mix)
	Item	**Part Number**	**Description**
Protective Apparel	Protective Glasses	605 00 04-15	Lexa- Clear lens
		605 00 04-16	Lexa- Grey lens
	Helmets	505 67 53-15	Helmet System (Husqvarna)
	Protective Gloves	531 30 02-73	Xtreme Duty Work Gloves (Medium)
		531 30 02-74	Xtreme Duty Work Gloves (Large)
		531 30 02-75	Xtreme Duty Work Gloves (X-Large)
	Chaps	605 00 00-13	Pro Forest Apron Chaps (Navy Blue)
		605 00 00-14	Pro Forest Apron Chaps (Orange)

455 RANCER

Part Number	Description	Square		Part Number	Description	Square
501 46 69-01	SCREW	N		503 93 66-01	AIR PURGE BUBBLE	L
501 46 84-01	SPRING	N		503 97 38-01	FELLING DOG	K
501 46 85-01	BALL	N		503 98 74-01	DECAL	C
501 46 87-01	SCREW	N		503 99 86-01	SPRING	M
501 48 54-02	SPARK PLUG CONN. KIT	E		504 13 08-08	METERING DIAPHRAGM	N
501 66 61-01	FUEL INLET SCREEN	N		504 13 09-06	GASKET	N
501 69 17-01	COMBI TOOL	P		504 21 00-49	SPRING, H-NEEDLE	N
501 76 83-25	FUEL HOSE 242/42	G		504 21 00-50	SPRING/COMPRESSION	N
502 21 36-01	DIAPHRAGM, FUEL PUMP	N		504 35 09-06	GASKET	N
503 20 02-16	SCREW	G		505 30 51-25	STARTER ROPE	D
503 20 05-27	SCREW	H		505 31 67-17	SCREW	N
503 20 34-30	SCREW	C		505 31 67-36	E CLIP	N
503 21 02-16	SCREW	M		505 31 67-54	DIAPHRAGM COVER	N
503 21 29-10	SCREW	D		505 52 01-25	FULCRUM PIN	N
503 21 53-20	SCREW	E		505 52 01-27	LEVER	N
503 21 55-25	SCREW	G		530 02 61-19	VALVE-CHECK (DUCKBILL)	K
503 21 68-20	SCREW	K		530 03 50-15	SCREW SHUTTERS	N
503 21 70-10	SCREW	A, K		537 00 34-01	SCREW	N
503 21 70-16	SCREW	Q		537 01 74-01	SLEEVE	A
503 21 73-21	SCREW	D		537 02 71-01	SCREW	B
503 21 74-12	SCREW	L		537 04 24-02	HOSE	L
503 21 74-16	SCREW	B		537 04 24-08	HOSE	L
503 21 74-50	SCREW	G		537 04 30-01	BRAKE BAND	A
503 21 77-16	SCREW	D		537 06 93-01	PUMPPISTON	B
503 21 88-25	SCREW	M		537 07 94-02	SCREW	A
503 22 00-01	NUT M8 FLANGE	A		537 08 00-01	SPRING	B
503 22 04-01	NUT W/ WASHER	E		537 08 90-01	PROTECTOR	A
503 22 69-02	CLIP	L		537 09 25-01	PULLEY	D
503 23 00-60	WASHER	B		537 10 55-02	PUMP	B
503 23 00-63	WASHER	A		537 10 80-01	COVER	A
503 23 51-11	BPMR7A NGK SPARK PLUG	H		537 11 05-01	CLUTCH ASSY	B
503 24 09-06	BEARING	B, H, J		537 16 21-05	SPARK PLUG COVER	E
503 25 16-01	BEARING	J		537 21 50-01	SEALING	L
503 25 52-01	NEEDLE BEARING	B		537 21 51-02	TANK CAP	L
503 26 19-01	COVER	J		537 21 52-02	TANK CAP	L
503 28 21-01	CARBURETOR	G, N		537 22 78-01	BOLT	K
503 28 90-50	PISTON RING	H		537 22 84-01	CYLINDER	B
503 40 59-01	PLUG	Q		537 23 05-01	FRONT HANDLE	M
503 42 43-01	NIPPLE	H		537 23 06-01	HANDLE HALF, RIGHT	M
503 43 65-01	LOCK SPRING	K		537 23 07-01	HANDLE HALF, RIGHT	M
503 44 32-01	FUEL FILTER	L		537 23 25-01	HANDLE	D
503 46 59-01	SPRING	A		537 23 61-01	PARTITION	G
503 56 34-01	INLET NEEDLE	N		537 24 08-01	SLEEVE	L
503 57 76-02	HOSE	L		537 24 14-01	INDUCTION MANIFOLD	G
503 57 89-01	HOLDER	L		537 24 15-01	FLANGE	G
503 73 58-01	FUEL TANK BUSHING	L		537 24 17-01	RETURN SPRING	D
503 78 32-01	SPRING, STARTER CATCH	E		537 24 29-01	PIN	M
503 79 05-02	RIVET	E		537 24 56-01	PAWL	E
503 80 04-01	JET	N		537 24 57-01	GASKET	H, K
503 85 41-01	VIBRATION ABSORBER	M		537 24 58-01	GASKET	H, K
503 85 52-01	SLEEVE	A		537 25 15-01	MUFFLER	F
503 86 92-01	MOVEMENT LIMITER	M		537 25 23-01	SCREEN	F
503 86 93-01	SUPPORT	K		537 25 26-01	PINION	B
503 86 97-01	SPRING	G		537 25 29-01	OIL PUMP	B
503 89 08-02	JOINT	A		537 25 55-01	STOP SWITCH	G
503 89 15-01	SPRING	B		537 25 56-01	CHOKE CONTROL	G
503 89 16-01	SPRING	B		537 25 57-01	AIR FILTER	G
503 89 24-01	CATCH	K		537 25 57-02	AIR FILTER	G
503 89 29-01	PIN	A		537 25 57-03	AIR FILTER	G
503 91 06-71	CHAIN CATCHER	P		537 26 04-01	GROMMET	K
503 91 39-01	LIMITER CAP	N		537 26 05-01	THROTTLE TRIGGER	M
503 91 40-01	LIMITER CAP	N		537 26 08-01	THROTTLE ROD	G
503 91 54-01	CAP	N		537 26 09-01	AIR CONDUCTOR	D
503 92 31-01	SPRING	M		537 26 14-01	OIL HOSE	B
503 93 51-01	THROTTLE FLAP	N		537 26 15-01	OIL HOSE	B

455 RANCER

Part Number	Description	Square		Part Number	Description	Square
537 26 24-01	THROTTLE LOCK	M		537 29 65-01	SCREW, HAND GUARD	K
537 27 13-01	PLATE	K		537 29 86-01	DECAL, CLUTCH COVER	A
537 27 27-01	CABLE ASSY	E		537 30 46-01	VIBRATIONS ABSORBER	M
537 27 80-01	SWITCH PLATE	L		537 30 49-01	LOOP	G
537 28 20-02	CRANKCASE	K		537 30 62-01		N
537 28 23-01	AIR CONDUCTOR	K		537 30 89-01	CYLINDER COVER	C
537 28 32-01	SLEEVE	D		537 31 05-01		H
537 28 41-01	STARTER DEVICE	D		537 31 40-01	CRANKSHAFT	J
537 28 42-01	STARTER HOUSING CPL.	D		537 31 79-01	JET	L
537 28 43-01	HAND GUARD	K		537 32 04-02	CYLINDER	H
537 28 63-01	CLUTCH COVER	A		537 32 10-01	INDUCTION MANIFOLD	G
537 28 64-01	COVER	A		537 32 30-01	FILTER HOLDER	G
537 28 65-01	SCREW	A		537 32 33-01	DECAL	D
537 28 66-01	PAWL	A		537 33 21-01	OIL SCREEN	B
537 28 76-01	HEAT SHIELD	F		721 11 64-30	PIN	B
537 28 77-01	GASKET	F		725 53 68-55	SCREW MC6S 6X16	F
537 29 16-02	CLUTCH DRUM	B		735 31 08-20	E-RING 4	A
537 29 17-02	CLUTCH DRUM	B		737 43 12-00	WRIST PIN CLIP	H
537 29 27-01	FLYWHEEL	E		740 48 07-02	O-RING	A
537 29 30-02	PISTON CPL.	H				

IPL, 455 Rancher, 2004-10, 106 40 11-61